AWP-ZX7

SERVICE MANUAL

Ver 1.0 2004.05

US Model
Canadian Model
AEP Model
UK Model
E Model

- AWP-ZX7 is composed of following models.
  As for the service manual, it is issued for each component model, then, please refer to them.

COMPONENT MODEL NAME

	AWP-ZX7
COMPACT DISK DECK RECEIVER SYSTEM	CX-LZX7
SPEAKER SYSTEM	SSX-LZX7

- Abbreviation
  CND : Canadian model
  E51 : Chilean and Peruvian models
  KR : Korean model
  SP : Singapore model

PARTS LIST

Part No.	Description	Remark
	ACCESSORIES	
	**********	
1-478-520-11	COMMANDER, STANDARD (RM-Z20051) (INCLUDING BATTERY COVER)	
1-754-102-31	ANTENNA, LOOP (LW.MW)	
1-754-243-11	ANTENNA (FM)	
⚠1-770-019-51	ADAPTOR, CONVERSION PLUG (UK)	
1-793-184-23	CONNECTOR (F TYPE ADAPTOR)	
1-823-704-11	CUSHION CORD, CONNECTION (USB)	
4-210-254-02	CUSHION (FOOT)(FOR SPEAKER)	
4-254-179-11	MANUAL, INSTRUCTION (ENGLISH)(EXCEPT KR)	
4-254-179-21	MANUAL, INSTRUCTION (FRENCH)(CND, AEP, SP)	
4-254-179-31	MANUAL, INSTRUCTION (SPANISH)(US, AEP, SP, E51)	
4-254-179-41	MANUAL, INSTRUCTION (CZECH, GERMAN, HANGARIAN, ITALIAN, POLISH, RUSSIAN)(AEP)	
4-254-179-51	MANUAL, INSTRUCTION (CHINESE)(SP)	
4-254-179-61	MANUAL, INSTRUCTION (KOREAN)(KR)	

The components identified by mark ⚠ or dotted line with mark ⚠ are critical for safety. Replace only with part number specified.	Les composants identifiés par une marque ⚠ sont critiques pour la sécurité. Ne les remplacer que par une pièce portant le numéro spécifié.

MICRO HI-FI COMPONENT SYSTEM

9-877-858-01
2004E16-1
© 2004.05

Sony Corporation
Home Audio Company
Published by Sony Engineering Corporation

REVISION HISTORY

Clicking the version allows you to jump to the revised page.
Also, clicking the version at the upper right on the revised page allows you to jump to the next revised page.

Ver.	Date	Description of Revision
1.0	2004.05	New

aiwa SERVICE

XR-X7

U, EZ, K, HR, C

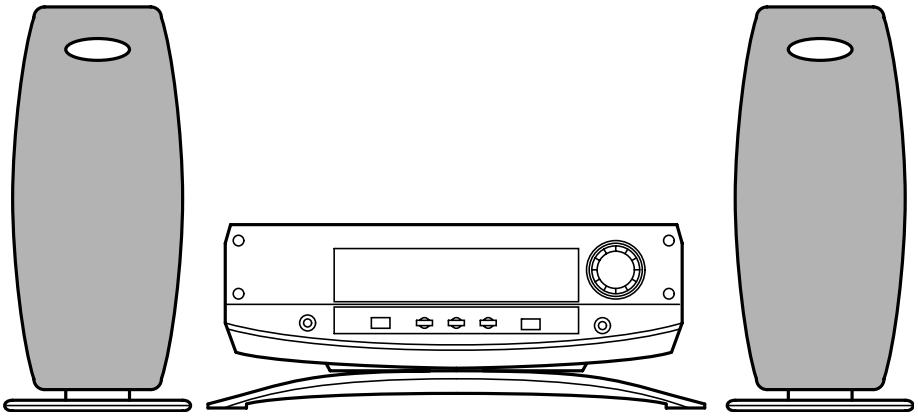

SERVICE MANUAL

COMPACT DISC
STEREO SYSTEM

BASIC CD MECHANISM : DA11B3

SYSTEM	COMPACT DISC	SPEAKER	REMOTE CONTROLLER
XR-X7	CX-LX7	SX-LX7	RC-BAT01(BS)

aiwa

S/M Code No. 09-018-445-8R2

TABLE OF CONTENTS

SPECIFICATIONS 3
PROTECTION OF EYES FROM LASER DURING SERVICING 4
ELECTRICAL MAIN PARTS LIST ..... 5 ~ 9
TRANSISTOR ILLUSTRATION 10
WIRING – 1 (AMP – MICON) <U, EZ, K, HR> 11
WIRING – 2 (AMP – MICON) <C> 12
SCHEMATIC DIAGRAM – 1 (AMP – MICON) 13
WIRING – 3 (FRONT / KEY / SUPPLY / MOSW / HP) <U, EZ, K> 14
WIRING – 4 (FRONT / KEY / SUPPLY / MOSW / HP) <HR, C> 15
SCHEMATIC DIAGRAM – 2 (FRONT / KEY / MOSW) 16
SCHEMATIC DIAGRAM – 3 (SUPPLY / HP) 17
WIRING – 5 (CD / JACK) <U, EZ, K> 18
WIRING – 6 (CD / JACK) <HR, C> 19
WIRING – 7 (CD – MOTOR> 20
SCHEMATIC DIAGRAM – 4 (CD 1 / 2 / CD – MOTOR) 21
SCHEMATIC DIAGRAM – 5 (CD 2 / 2 / JACK) 22
WIRING – 8 (PT) <U, EZ, K, C> 23
SCHEMATIC DIAGRAM – 6 (PT) <U, EZ, K, C> 24
WIRING – 9 (PT) <HR> 25
SCHEMATIC DIAGRAM – 7 (PT) <HR> 26
WIRING – 10 (TUNER) <U, HR, C> 27
SCHEMATIC DIAGRAM – 8 (TUNER) <U, HR, C> 28
WIRING – 11 (TUNER) <EZ, K> 29
SCHEMATIC DIAGRAM – 9 (TUNER) <EZ, K> 30
IC BLOCK DIAGRAM 31, 32
LCD DIAGRAM 33
IC DESCRIPTION ..... 34 ~ 39
ADJUSTMENT <TUNER / CD / AMP – MICON> ..... 40 ~ 44
CD TEST MODE 45
MECHANICAL PARTS ARRANGEMENT ..... 46 ~ 51
MECHANICAL PARTS LIST 1 / 1 52
CD MECHANISM EXPLODED VIEW 1 / 1 53
CD MECHANISM PARTS LIST 1 / 1 53
GENERAL SPEAKER DISASSEMBLY INSTRUCTIONS (FOR REFERENCE) 54
SPEAKER PARTS LIST <SX – LX7 (YJSN, YUJSN)> 55
ACCESSORIES / PACKAGE LIST 55

SPECIFICATIONS <EZ, K>

MAIN UNIT CX-LX7

TUNER

FM tuning range	87.5 MHz to 108 MHz
FM usable sensitivity (IHF)	16.8 dBf
FM antenna terminal	75 ohms (unbalanced)
MW tuning range	531 kHz to 1602 kHz (9 kHz step) 530 kHz to 1710 kHz (10 kHz step)
MW usable sensitivity	350 µV/m
LW tuning range	144 kHz to 290 kHz
LW usable sensitivity	1400 µV/m
MW/LW antenna	Loop antenna

AMPLIFIER

Power output	Rated: 16 W + 16 W (6 ohms, THD 1 %, 1 kHz/DIN 45500) Reference: 20 W + 20 W (6 ohms, THD 10 %, 1 kHz/DIN 45324) DIN MUSIC POWER: 30 W + 30 W
Input	VIDEO/AUX: 400 mV
Outputs	SPEAKERS: 6 ohms or more PHONES: 16 ohms or more SUB WOOFER: 1.0 V DIGITAL OUT (OPTICAL) jack LINE OUT jack

CD PLAYER

Laser	Semiconductor laser (λ = 780 nm)
D/A converter	1 bit dual
Signal-to-noise ratio	85 dB (1 kHz, 0 dB)
Harmonic distortion	0.08 % (1 kHz, 0 dB)
Wow and flutter	Unmeasurable

GENERAL

Power requirements	230 V AC, 50 Hz
Power consumption	EZ: 50 W K: 55 W
Power consumption in standby mode	EZ: With ECO mode on: 1.2 W With ECO mode off: 13 W K: With ECO mode on: 1.5 W With ECO mode off: 15 W
Dimensions (W x H x D)	249 x 92 x 353 mm
Weight	3.5 kg

SPEAKER SYSTEM SX-LX7

Speaker system	2 way, bass reflex (magnetic shielded)
Speaker units	Woofer: 80 mm cone Tweeter: 25 mm dome
Impedance	6 ohms
Dimensions (W x H x D)	98 x 260 x 191 mm
Weight	1.6 kg

• Design and specifications are subject to change without notice.

SPECIFICATIONS <U, HR, C>

MAIN UNIT CX-LX7

TUNER

FM tuning range	87.5 MHz to 108 MHz
FM usable sensitivity (IHF)	13.2 dBf
FM antenna terminals	75 ohms (unbalanced)
AM tuning range	530 kHz to 1710 kHz (10 kHz step) 531 kHz to 1602 kHz (9 kHz step)
AM usable sensitivity	350 µV/m
AM antenna	Loop antenna

AMPLIFIER

Power output <U, C>	16 W + 16 W (150 Hz - 16 kHz, THD less than 1 %, 6 ohms) 20 W + 20 W (1 kHz, THD less than 10 %, 6 ohms)
Total harmonic distortion <U, C>	0.1 % (6 W, 1 kHz, 6 ohms, DIN AUDIO)
Power output <HR>	Rated: 16 W + 16 W (6 ohms, THD 1 %, 1 kHz) Reference: 20 W + 20 W (6 ohms, THD 10 %, 1 kHz)
Input	VIDEO/AUX: 400 mV
Outputs	SPEAKERS: 6 ohms or more PHONES: 16 ohms or more SUB WOOFER: 1.0 V DIGITAL OUT (OPTICAL) jack LINE OUT jack

CD PLAYER

Laser	Semiconductor laser (λ = 780 nm)
D/A converter	1 bit dual
Signal-to-noise ratio	85 dB (1 kHz, 0 dB)
Harmonic distortion	0.08 % (1 kHz, 0 dB)
Wow and flutter	Unmeasurable

GENERAL

Power requirements	U, C: 120 V AC, 60 Hz HR: 120 / 220 - 240 V AC switchable 50 / 60 Hz
Power consumption	U: 45 W C: 50 W HR: 60 W
Power consumption in standby mode	With ECO mode on: 1.0 W U, C: With ECO mode off: 13 W HR: With ECO mode off: 15 W
Dimensions (W x H x D)	249 x 92 x 350 mm (9 7/8 x 3 3/4 x 13 7/8 in.)
Weight	3.5 kg (7 lbs 13 oz)

SPEAKER SYSTEM SX-LX7

Speaker system	2 way, bass reflex (magnetic shielded)
Speaker units	Woofer: 80 mm (3 1/4 in.) cone Tweeter: 25 mm (1 in.) dome
Impedance	6 ohms
Dimensions (W x H x D)	98 x 260 x 191 mm (3 7/8 x 10 3/8 x 7 5/8 in.)
Weight	1.6 kg (3 lbs 10 oz)

• Design and specifications are subject to change without notice.

PROTECTION OF EYES FROM LASER BEAM DURING SERVICING

This set employs laser. Therefore, be sure to follow carefully the instructions below when servicing.

WARNING!!
WHEN SERVICING, DO NOT APPROACH THE LASER EXIT WITH THE EYE TOO CLOSELY. IN CASE IT IS NECESSARY TO CONFIRM LASER BEAM EMISSION. BE SURE TO OBSERVE FROM A DISTANCE OF MORE THAN 30cm FROM THE SURFACE OF THE OBJECTIVE LENS ON THE OPTICAL PICK-UP BLOCK.

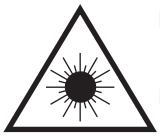

- Caution: Invisible laser radiation when open and interlocks defeated avoid exposure to beam.
- Advarsel: Usynlig laserstråling ved åbning, når sikkerhedsafbrydere er ude af funktion. Undgå udsættelse for stråling.

VAROITUS!
Laiteen Käyttäminen muulla kuin tässä käyttöohjeessa mainitulla tavalla saataa altistaa käyt-täjän turvallisuusluokan 1 ylittävälle näkymättömälle lasersäteilylle.

VARNING!
Om apparaten används på annat sätt än vad som specificeras i denna bruksanvising, kan användaren utsättas för osynling laserstrålning, som överskrider gränsen för laserklass 1.

CAUTION
Use of controls or adjustments or performance of procedures other than those specified herin may result in hazardous radiation exposure.

ATTENTION
L'utillisation de commandes, réglages ou procédures autres que ceux spécifiés peut entraîner une dangereuse exposition aux radiations.

ADVARSEL
Usynlig laserstråling ved åbning, når sikkerhedsafbrydereer ude af funktion. Undgå udsættelse for stråling.

This Compact Disc player is classified as a CLASS 1 LASER product.
The CLASS 1 LASER PRODUCT label is located on the rear exterior.

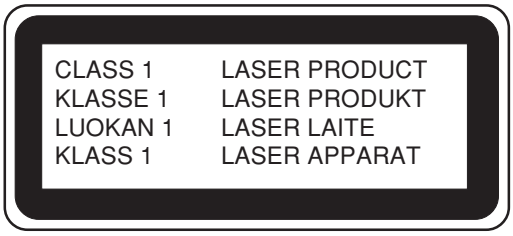

Precaution to replace Optical block (SF-P101NR)

Body or clothes electrostatic potential could ruin laser diode in the optical block. Be sure ground body and workbench, and use care the clothes do not touch the diode.

1) After the connection, remove solder shown in right figure.

PICK-UP Assy PWB

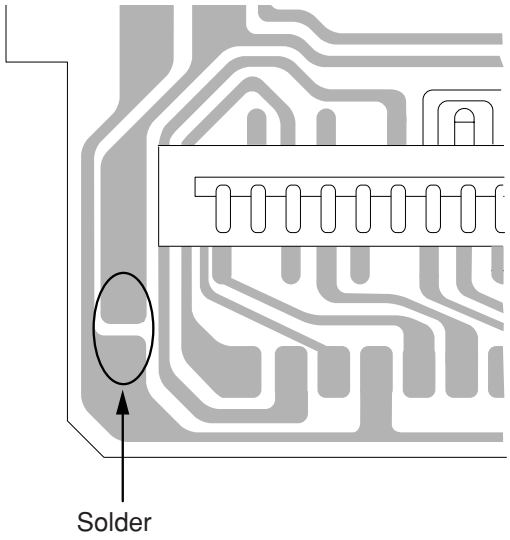

ELECTRICAL MAIN PARTS LIST

REF. NO.	PART NO.	KANRI NO.	DESCRIPTION
IC			
	87-A20-446-010		C-IC,LA9241ML
	87-A21-319-010		C-IC,LC78622NE
	87-017-917-080		IC,BU4066BCF
	87-A21-968-030		C-IC,LC75824E
	87-A22-043-010		IC,SPS-440-1-E1
	87-A21-985-040		C-IC,BA5983FM
	87-001-576-010		IC,MJM7812FA
	87-002-349-010		IC,NJM78M06FA
	87-A21-298-010		IC,SI-3050F
	8B-CL2-601-030		C-IC,LC876564V-5V69
	87-A21-452-130		C-IC,BD3876AKS2
	87-A21-103-040		C-IC,MM1454XFBE
	87-017-825-010		IC,GP1F32T
	87-A21-928-010		IC,LC72131D-N
	87-A20-440-040		C-IC,BU1920FS<EZ>
	87-A20-913-010		IC,LA1837NL
TRANSISTOR			
	87-026-463-080		TR,2SA933SRS
	87-026-245-080		TR,DTC114ES
	87-A30-198-080		TR,KTC3199GR
	87-026-609-080		TR,KTA1266GR
	87-A30-427-040		C-TR,DTC114EKA
	87-A30-075-080		C-TR,2SA1235F
	87-A30-447-040		C-TR,DTA114EKA
	87-A30-234-080		TR,CSC4115BC
	87-A30-520-080		TR,2SC5342Y
	87-A30-515-080		TR,2SA1979O/Y
	87-A30-076-080		C-TR,2SC3052F
	89-333-266-080		CHIP TR,2SC3326B
	87-A30-107-070		C-TR,CMBT5401
	87-A30-060-080		C-TR,KTC3875GR
	87-A30-190-080		TR,CC5551
	87-A30-306-010		TR,2SB1677
	87-A30-307-010		TR,2SD2619
	87-A30-257-080		C-TR,2SD1306E
	87-A30-484-080		C-TR,KRA102S
	87-A30-061-080		C-TR,KTA1504GR
	87-A30-494-080		TR,2SA1980G
	87-A30-490-080		C-TR,KRC107S
	87-A30-087-080		C-FET,2SK2158
	87-A30-287-040		C-TR,DTC114TKA
	87-A30-196-080		TR,2SC4115SRS
	89-327-143-080		C-TR,2SC2714O
	87-A30-072-080		C-TR,RT1P 144C
	87-A30-635-040		C-TR,SBT5401F<HR,C>
	89-322-405-080		TR,2SC2240GR<C>
	89-503-602-080		C-FET,2SK360E<EZ,K>
	87-A30-086-070		C-TR,CSD1306E<EZ,K>
	87-A30-074-080		C-TR,RT1P141C<EZ,K>
DIODE			
	87-020-465-080		DIODE,1SS133 (110MA)
	87-070-274-080		DIODE,1N4003 SEM
	87-070-136-080		ZENER,MTZJ5.1B
	87-A40-313-080		C-DIODE,MC2840
	87-A40-270-080		C-DIODE,MC2838
	87-A40-269-080		C-DIODE,MC2836
	87-A40-505-040		C-DIODE,KDS181
	87-017-654-060		DIODE,GBU6JL6131
	87-017-650-080		DIODE,1SS119
	87-A40-504-040		C-DIODE,KDS184
	87-A40-748-080		ZENER,UZ5.6BSA
	87-A40-437-080		ZENER,MTZJ4.3B
	87-017-148-080		ZENER,HZS6A1L

REF. NO.	PART NO.	KANRI NO.	DESCRIPTION
AMP-MICON C.B			
C114	87-016-044-040		CAP,E 100-16 GAS
C115	87-016-044-040		CAP,E 100-16 GAS
C116	87-016-044-040		CAP,E 100-16 GAS
C161	87-010-553-040		CAP,E 47-16
C162	87-010-496-040		CAP,E 3.3-50 5L
C201	87-012-278-080		C-CAP,U 2200P-50 B
C202	87-012-278-080		C-CAP,U 2200P-50 B
C203	87-010-421-080		CAP, ELECT 4.7-50V
C204	87-A12-090-080		CAP,E 4.7-50 SMG
C205	87-012-281-080		C-CAP,U 3900P-50 B
C206	87-012-281-080		C-CAP,U 3900P-50 B
C207	87-A12-090-080		CAP,E 4.7-50 SMG
C208	87-A12-090-080		CAP,E 4.7-50 SMG
C211	87-A12-070-080		CAP,E 33-25 SMG
C212	87-A12-070-080		CAP,E 33-25 SMG
C213	87-012-266-080		C-CAP,U 220P-50 B
C214	87-012-266-080		C-CAP,U 220P-50 B
C219	87-012-286-080		C-CAP,U 0.01-25 K B
C220	87-012-286-080		C-CAP,U 0.01-25 K B
C221	87-010-831-080		C-CAP,U,0.1-16F
C222	87-010-831-080		C-CAP,U,0.1-16F
C231	87-010-490-040		CAP, ELECT 0.1-50
C232	87-010-490-040		CAP, ELECT 0.1-50
C298	87-012-282-080		C-CAP,U 4700P-50 K B
C299	87-012-286-080		C-CAP,U 0.01-25 K B
C301	87-012-278-080		C-CAP,U 2200P-50 B
C302	87-A10-781-080		C-CAP,U 0.15-10 K B
C303	87-010-785-080		C-CAP,U0.015-25BK
C305	87-A12-063-080		CAP,E 220-10 SMG
C306	87-012-195-080		C-CAP,U 100P-50CH
C307	87-012-176-080		C-CAP,U 15P-50 J CH
C308	87-012-198-080		C-CAP,U 180P-50 J CH
C309	87-012-274-080		CHIP CAP,U 1000P-50B
C310	87-010-831-080		C-CAP,U,0.1-16F
C313	87-010-831-080		C-CAP,U,0.1-16F
C314	87-010-831-080		C-CAP,U,0.1-16F
C315	87-010-831-080		C-CAP,U,0.1-16F
C471	87-A11-132-080		CAP,TC U 0.01-50 K B<EXCEPT C>
C471	87-012-286-080		C-CAP,U 0.01-25 KB<C>
C472	87-A11-132-080		CAP,TC U 0.01-50 K B<EXCEPT C>
C472	87-012-286-080		C-CAP,U 0.01-25 KB<C>
C473	87-A11-132-080		CAP,TC U 0.01-50 K B
CN101	87-099-411-010		CONN,11P V WHT EH
CN201	87-049-919-010		CONN,3P V WHT EH
CN401	87-A61-370-010		CONN,21P V BLK FMN-BTRK
CN403	87-A61-272-010		CONN,11P V BLK FMN-BTRK
CN404	87-A60-900-010		CONN,9P V BLK FMN-BTRK
CN405	87-099-014-010		CONN,12P V BLK 6216
CN406	87-099-211-010		CONN,4P V BLK 6216<EZ>
CNA101	87-A60-620-010		CONN,3P V 2MM JMT
L151	87-A50-333-010		COIL,OSC 9.43MHZ
R229	87-A00-258-080		RES,M/F 0.22-1W J
R230	87-A00-258-080		RES,M/F 0.22-1W J
R231	87-A00-258-080		RES,M/F 0.22-1W J
R232	87-A00-258-080		RES,M/F 0.22-1W J
R319	87-022-239-080		C-RES U 10K-1/16WF
R324	87-022-239-080		C-RES U 10K-1/16WF
TH201	87-A91-042-080		C-THMS,100K 55001
TH202	87-A91-042-080		C-THMS,100K 55001
FRONT C.B			
C101	87-012-195-080		C-CAP,U 100P-50CH
C102	87-010-560-040		CAP,E 10-50 GAS
C103	87-010-829-080		CAP, U 0.047-16
C104	87-010-829-080		CAP, U 0.047-16
C105	87-012-195-080		C-CAP,U 100P-50CH
C106	87-012-195-080		C-CAP,U 100P-50CH

REF. NO.	PART NO.	KANRI NO.	DESCRIPTION
C107	87-012-195-080		C-CAP,U 100P-50CH
C108	87-010-831-080		C-CAP,U,0.1-16F
C111	87-012-274-080		CHIP CAP,U 1000P-50B
C112	87-010-560-040		CAP,E 10-50 GAS
C113	87-012-286-080		C-CAP,U 0.01-25 K B
C114	87-012-286-080		C-CAP,U 0.01-25 K B
CN101	87-A61-370-010		CONN,21P V BLK FMN-BTRK
CN102	87-099-201-010		CONN,8P H BLK 6216
FFC101	8B-CL2-660-010		FF-CABLE,21P 1.0
LCD101	8B-CL2-605-010		LCD,AIW4277-30PIN BCL-2
LED101	87-A40-317-080		LED,SLR-342VCT31 RED
LED102	87-A92-077-010		LED,SMLU1BE16C-SLF73 BLU/UMB
LED103	87-A92-077-010		LED,SMLU1BE16C-SLF73 BLU/UMB
LED104	87-A41-054-010		LED,SELV1D10CXM-S GREEN<U,EZ,K>
LED104	87-A92-078-010		LED,SELU1D10CXM-SLF38 GR<HR,C>
LED105	87-A41-054-010		LED,SELV1D10CXM-S GREEN<U,EZ,K>
LED105	87-A92-078-010		LED,SELU1D10CXM-SLF38 GR<HR,C>
S101	87-A91-633-010		SW,RTRY XRE012103PVB25FINA 1-2
S111	87-A90-095-080		SW,TACT EVQ11G04M
S112	87-A90-095-080		SW,TACT EVQ11G04M
S113	87-A90-095-080		SW,TACT EVQ11G04M
S114	87-A90-095-080		SW,TACT EVQ11G04M
S115	87-A90-095-080		SW,TACT EVQ11G04M
S116	87-A90-095-080		SW,TACT EVQ11G04M
S117	87-A90-095-080		SW,TACT EVQ11G04M

CD C.B

C1	87-010-418-040		CAP,E 3.3-25 5L
C2	87-012-286-080		C-CAP,U 0.01-25 K B
C3	87-010-263-040		CAP,E 100-10
C4	87-A12-063-040		CAP,E 220-10 SMG
C5	87-012-286-080		C-CAP,U 0.01-25 K B
C6	87-010-234-040		CAP,E 47-16 5L
C7	87-012-274-080		CHIP CAP,U 1000P-50B
C8	87-010-787-080		C-CAP,U 0.022-25 K B
C9	87-A12-063-040		CAP,E 220-10 SMG
C10	87-010-263-040		CAP,E 100-10 M 11L SME
C11	87-A10-794-080		C-CAP,U 0.15-16 Z F
C12	87-010-071-040		CAP,E 1-50 M 5L SRE
C13	87-010-788-080		C-CAP,U 0.033-25 Z F
C14	87-010-405-040		CAP,E 10-50 M 11L SME
C16	87-015-962-040		CAP,E 0.22-50 M 5L SRE
C17	87-012-268-080		C-CAP,U 330P-50 B
C18	87-010-785-080		C-CAP,U0.015-25BK
C19	87-A10-706-080		C-CAP,U 0.33-16 Z F
C20	87-010-788-080		C-CAP,U 0.033-25 Z F
C21	87-A10-794-080		C-CAP,U 0.15-16 Z F
C22	87-012-280-080		C-CAP,U 3300P-50 K B
C23	87-A10-504-080		C-CAP,U 0.047-16 K B
C24	87-A10-025-080		C-CAP,U 0.22-16Z F
C25	87-012-272-080		C-CAP,U 680P-50 B
C26	87-A10-706-080		C-CAP,U 0.33-16 Z F
C28	87-012-286-080		C-CAP,U 0.01-25 K B
C29	87-012-282-080		C-CAP,U 4700P-50 K B
C30	87-012-199-080		C-CAP,U 220P-50 J CH
C31	87-010-068-040		CAP E 0.22-50 5L
C32	87-015-680-040		CAP,E 47-10 7L
C33	87-010-071-040		CAP,E 1-50 M 5L SRE
C34	87-012-280-080		C-CAP,U 3300P-50 K B
C35	87-012-286-080		C-CAP,U 0.01-25 K B
C36	87-010-374-040		CAP,E 47-10
C37	87-010-404-040		CAP,E 4.7-50 SME
C38	87-010-831-080		C-CAP,U,0.1-16F
C39	87-012-274-080		CHIP CAP,U 1000P-50B
C40	87-012-162-080		C-CAP,U 1P-50 CK
C41	87-012-280-080		C-CAP,U 3300P-50 K B
C42	87-012-176-080		C-CAP,U 15P-50 J CH
C45	87-010-831-080		C-CAP,U,0.1-16F
C46	87-010-831-080		C-CAP,U,0.1-16F
C47	87-010-831-080		C-CAP,U,0.1-16F<U,EZ,K,C>
C48	87-012-182-080		C-CAP,U 27P-50 CH
C51	87-012-199-080		C-CAP,U 220P-50 J CH
C53	87-012-195-080		C-CAP,U 100P-50CH
C55	87-010-263-040		CAP,E 100-10<U,EZ,K,C>
C57	87-012-184-080		C-CAP,U 33P-50 CH
C58	87-012-184-080		C-CAP,U 33P-50 CH
C59	87-010-263-040		CAP,E 100-10
C60	87-010-831-080		C-CAP,U,0.1-16F<U,EZ,K,C>
C61	87-010-831-080		C-CAP,U,0.1-16F<U,EZ,K,C>
C62	87-A12-058-040		CAP,E 470-6.3 SMG
C65	87-010-404-040		CAP,E 4.7-50 SME
C66	87-010-831-080		C-CAP,U,0.1-16F<U,EZ,K,C>
C67	87-010-263-040		CAP,E 100-10<U,EZ,K,C>
C69	87-012-197-080		C-CAP,U 150P-50 CH
C70	87-018-134-080		CAP,TC U 0.01-16 NY UP050<C>
C71	87-018-208-080		CAP,TC U 0.047-50 ZF<C>
C72	87-012-286-080		C-CAP,U 0.01-25 K B<C>
C73	87-010-831-080		C-CAP,U 0.1-16 ZF<C>
C74	87-018-208-080		CAP,TC U 0.047-50 ZF<C>
C75	87-010-831-080		C-CAP,U 0.1-16 ZF<C>
C76	87-010-831-080		C-CAP,U 0.1-16 ZF<C>
C81	87-010-417-040		CAP,E 2.2-35 5L
C82	87-010-417-040		CAP,E 2.2-35 5L
C83	87-012-277-080		C-CAP, U 1800P-50 B
C84	87-012-277-080		C-CAP, U 1800P-50 B
C93	87-A10-260-080		C-CAP,U 0.1-16 K B<U,EZ,K,C>
C94	87-A10-260-080		C-CAP,U 0.1-16 K B<U,EZ,K,C>
C95	87-012-286-080		C-CAP,U 0.01-25 K B
C100	87-018-131-080		CAP,TC U 1000P-50<EZ,K>
C101	87-012-195-080		C-CAP,U 100P-50CH
C102	87-012-195-080		C-CAP,U 100P-50CH
C103	87-012-195-080		C-CAP,U 100P-50CH
C104	87-012-195-080		C-CAP,U 100P-50CH
C105	87-012-195-080		C-CAP,U 100P-50CH
C106	87-010-494-040		CAP,E 1-50 GAS
C110	87-010-831-080		C-CAP,U,0.1-16F
C120	87-A12-326-080		CAP,E 1000-16 RS
C121	87-012-286-080		C-CAP,U 0.01-25 K B
C123	87-012-286-080		C-CAP,U 0.01-25 K B
C124	87-012-199-080		C-CAP,U 220P-50 K B
C125	87-012-270-080		C-CAP,U 470P-50 K B
C126	87-012-270-080		C-CAP,U 470P-50 K B
C127	87-012-199-080		C-CAP,U 220P-50 J CH
C200	87-018-131-080		CAP,TC U 1000P-50<EZ,K>
C201	87-012-199-080		C-CAP,U 220P-50 J CH
C202	87-012-199-080		C-CAP,U 220P-50 J CH
C213	87-010-758-080		C-CAP,U 0.068-25F
C214	87-010-758-080		C-CAP,U 0.068-25F
C215	87-010-544-040		CAP,E 0.1-50 SME
C216	87-010-544-040		CAP,E 0.1-50 SME
C217	87-012-278-080		C-CAP,U 2200P-50 B
C218	87-012-278-080		C-CAP,U 2200P-50 B
C301	87-010-235-080		CAP,E 470-16 SME
C302	87-010-112-040		CAP,E 100-16
C303	87-010-553-040		CAP,E 47-16 GAS
C304	87-010-404-040		CAP,E 4.7-50 SME
C305	87-010-494-040		CAP,E 1-50 GAS
C495	87-010-831-080		C-CAP,U,0.1-16F
C496	87-012-286-080		C-CAP,U 0.01-25 K B
C501	87-A12-071-040		CAP,E 47-25 SMG
C502	87-A12-071-040		CAP,E 47-25 SMG
C503	87-012-274-080		CHIP CAP,U 1000P-50B
C504	87-012-274-080		CHIP CAP,U 1000P-50B
C511	87-012-276-080		C-CAP,U 1500P-50 K B
C512	87-012-276-080		C-CAP,U 1500P-50 K B
C521	87-010-758-080		C-CAP,U 0.068-25F
C522	87-A11-070-080		C-CAP,U 0.033-16 K B
C524	87-010-401-040		CAP,E 1-50 SME
C525	87-A10-260-080		C-CAP,U 0.1-16 K B

REF. NO.	PART NO.	KANRI NO.	DESCRIPTION
C526	87-A10-260-080		C-CAP,U 0.1-16 K B
C527	87-012-286-080		C-CAP,U 0.01-25 K B
C528	87-012-286-080		C-CAP,U 0.01-25 K B
C531	87-010-421-040		CAP,E 4.7-50 5L
C532	87-010-421-040		CAP,E 4.7-50 5L
C535	87-A10-504-080		C-CAP,U 0.047-16 K B
C536	87-A10-504-080		C-CAP,U 0.047-16 K B
C537	87-010-493-040		CAP,E 0.47-50 M 5L SRE
C538	87-010-493-040		CAP,E 0.47-50 M 5L SRE
C539	87-012-281-080		C-CAP,U 3900P-50 B
C540	87-012-281-080		C-CAP,U 3900P-50 B
C541	87-A10-260-080		C-CAP,U 0.1-16 K B
C542	87-A10-260-080		C-CAP,U 0.1-16 K B
C543	87-A10-260-080		C-CAP,U 0.1-16 K B
C544	87-A10-260-080		C-CAP,U 0.1-16 K B
C545	87-A10-260-080		C-CAP,U 0.1-16 K B
C546	87-010-403-040		CAP,E 3.3-50 M 11L SME
C547	87-010-401-040		CAP,E 1-50 SME
C549	87-010-071-040		CAP,E 1-50 M 5L SRE
C550	87-010-071-040		CAP,E 1-50 M 5L SRE
C595	87-012-286-080		C-CAP,U 0.01-25 KB<HR>
C603	87-010-402-040		CAP,E 2.2-50 SME
C604	87-010-402-040		CAP,E 2.2-50 SME
C605	87-010-408-040		CAP,E 47-50 SME
C607	87-010-405-040		CAP,E 10-50
C608	87-010-405-040		CAP,E 10-50
C609	87-010-759-080		C-CAP,U, 0.1-25F
C610	87-010-384-040		CAP,E 100-25 SME
C611	87-012-286-080		C-CAP,U 0.01-25 K B
C612	87-012-286-080		C-CAP,U 0.01-25 K B
C702	87-010-374-040		CAP,E 47-10
C703	87-010-831-080		C-CAP,U,0.1-16F
C913	87-012-286-080		C-CAP,U 0.01-25 K B
CN1	87-A60-429-010		CONN,16P H TOC-A
CN2	87-A60-623-010		CONN,6P V 2MM JMT
CN4	87-A60-900-010		CONN,9P V BLK FMN-BTRK
CN201	87-A60-059-010		CONN,08P V 9604S-08C
CN302	87-A60-619-010		CONN,2P V 2MM JMT
CN501	87-A61-272-010		CONN,11P V BLK FMN-BTRK
CNA301	87-099-410-010		CONN,10P V WHT EH
CON2	86-ZG1-609-010		CONN ASSY,6P
FFC1	8B-CL2-663-010		FF-CABLE,16P 1.0
FFC4	8B-CL2-661-010		FF-CABLE,9P 1.0
FFC501	8B-CL2-662-010		FF-CABLE,11P 1.0
J202	87-YP6-608-010		TERMINAL,SPKR 4P
JR58	87-A50-189-080		C-COIL,S BLM21B272S
JR101	87-A50-189-080		C-COIL,S BLM21B272S
JW38	87-008-372-080		FLTR,EMI BL01 RN1
JW39	87-008-372-010		FLTR,EMIBL01 RN1<EZ,K>
JW43	87-008-372-010		FLTR,EMIBL01 RN1<HR>
L1	87-003-102-080		COIL,10UH J LAL02
L2	87-003-146-080		COIL,15UH J LAL02
L3	87-008-372-080		FLTR,EMI BL01 RN1
L4	87-003-102-080		COIL,10UH J LAL02
L5	87-003-152-080		COIL,100UH J LAL02
L6	87-003-102-080		COIL,10UH J LAL02
L7	87-003-102-080		COIL,10UH J LAL02
L8	87-003-102-080		COIL,10UH J LAL02
L201	87-003-383-010		COIL,1UH K
L202	87-003-383-010		COIL,1UH K
SFR130	87-024-437-080		SFR,100K H RH063MC
X1	87-A70-046-010		VIB,XTAL 16.934MHZ

KEY C.B

C100	87-018-131-080		CAP,TC U 1000P-50K
C142	87-010-553-040		CAP,E 47-16 M 5L SRE<HR,C>
CN141	87-A60-156-010		CONN,08P H FE<U>
CN141	87-A60-079-010		CONN,08P H 9604S-08F<EZ,K,HR,C>
CN142	87-A60-153-010		CONN,05P H FE<U>
CN142	87-A60-082-010		CONN,05P H 9604S-05F<EZ,K,HR,C>
FFC141	88-908-201-110		FF-CABLE,8P 1.25
FFC142	88-905-121-110		FF-CABLE, 5P 120MM
S141	87-A90-095-080		SW,TACT EVQ11G04M
S142	87-A90-095-080		SW,TACT EVQ11G04M
S143	87-A90-095-080		SW,TACT EVQ11G04M
S144	87-A90-095-080		SW,TACT EVQ11G04M
S145	87-A90-095-080		SW,TACT EVQ11G04M
S146	87-A90-095-080		SW,TACT EVQ11G04M
S147	87-A90-095-080		SW,TACT EVQ11G04M
S148	87-A90-095-080		SW,TACT EVQ11G04M
S149	87-A90-095-080		SW,TACT EVQ11G04M

SUPPLY C.B

C1	87-A11-148-080		CAP,TC U 0.1-50Z<EZ,K>
C2	87-018-104-080		CAP,TC U 10P-50<EZ,K>
C3	87-018-104-080		CAP,TC U 10P-50<EZ,K>
C201	87-A10-520-000		CAP,E 3300-35 M SMG
C202	87-016-051-000		CAP,E 2200-35 M SMG
C203	87-A12-317-080		C-CAP,U 0.1-50 Z F
C204	87-A12-317-080		C-CAP,U 0.1-50 Z F
C205	87-010-831-080		C-CAP,U,0.1-16F
C206	87-010-831-080		C-CAP,U,0.1-16F
C207	87-A12-317-080		C-CAP,U 0.1-50 Z F
C208	87-A12-317-080		C-CAP,U 0.1-50 Z F
C209	87-010-831-080		C-CAP,U,0.1-16F
C210	87-010-831-080		C-CAP,U,0.1-16F
C211	87-A12-074-080		CAP,E 470-25 SMG
C212	87-010-831-080		C-CAP,U,0.1-16F
C213	87-010-831-080		C-CAP,U,0.1-16F
C214	87-A12-068-080		CAP,E 470-16 SMG
C215	87-016-521-010		CAP,E2200-16 SMG
C216	87-010-831-080		C-CAP,U,0.1-16F
C217	87-010-380-040		CAP,E 47-16 M 11L SMG
CN201	87-009-195-010		CONN,5P V WHT EH
CN202	87-099-043-010		CONN 2P V WHT EH
CNA201	8B-CL2-671-010		CONN ASSY,11P EH
CNA203	8B-CL2-668-010		CONN ASSY,10P EH
PR201	87-A91-935-080		PROTECTOR,1A 20P 60V

PT C.B

⚠ C1	87-A10-479-080		CAP,CER 2200P-250 M E KH<EXCEPT HR>
C14	87-A10-831-080		CAP,E 1000-25 M SMG
C16	87-010-496-080		CAP,E 3.3-50 5L
⚠ CN1	87-A60-645-010		CONN,3P V VH<U,EZ,K,C>
⚠ CN1	87-A60-851-010		CONN,9P V VH<HR>
CNA1	8B-CL2-669-010		CONN ASSY,3P V STBY
CNA2	88-805-021-090		CONN ASSY,2P<HR>
⚠ CNA3	8B-CL2-673-010		CONN ASSY,7P V RY<HR>
⚠ F1	87-A91-224-010		FUSE,1.25A 125V<U>
⚠ FC1	87-033-213-080		FUSE CLAMP,PFC5000<U>
⚠ FC2	87-033-213-080		FUSE CLAMP,PFC5000<U>
⚠ PT1	8A-NF8-661-010		PT,SUB ANF-8 (U)<U,C>
⚠ PT1	8A-NF8-662-010		PT,SUB ANF-8 (E)<EZ,K>
⚠ PT1	8A-NF8-663-010		PT,SUB ANF-8 (H)<HR>
⚠ PT2	8B-CL2-650-010		PT,BCL-2 U<U>
⚠ PT2	8B-CL2-652-010		PT,BCL-2 EZ<EZ,K>
⚠ PT2	8B-CL2-653-010		PT,BCL-2 HR<HR>
⚠ PT2	8B-CL2-654-010		PT,BCL-2 C<C>
⚠ R3	87-A01-010-080		RES,SD 2.2M-1/2W J RCR50+<C>
⚠ RY1	87-A90-977-010		RELAY,AC12V DG12D1-O(M)<U,EZ,K,C>
⚠ S1	87-A90-234-010		SW,SL 1-2-2 SWS2201<HR>
⚠ T1	87-A60-317-010		TERMINAL, 1P MSC
⚠ T2	87-A60-317-010		TERMINAL, 1P MSC

TUNER C.B

C701	87-A12-071-080		CAP,E 47-25 SMG

REF. NO.	PART NO.	KANRI NO.	DESCRIPTION
C702	87-A12-090-080		CAP,E 4.7-50 SMG
C703	87-012-286-080		C-CAP,U 0.01-25 K B
C704	87-012-286-080		C-CAP,U 0.01-25 K B
C709	87-012-195-080		C-CAP,U 100P-50CH
C711	87-A12-062-080		CAP,E 100-10 SMG
C712	87-010-196-080		CHIP CAPACITOR,0.1-25
C713	87-012-286-080		C-CAP,U 0.01-25 K B
C714	87-012-286-080		C-CAP,U 0.01-25 K B
C715	87-012-195-080		C-CAP,U 100P-50 J CH<EZ,K>
C717	87-012-286-080		C-CAP,U 0.01-25 K B
C719	87-012-286-080		C-CAP,U 0.01-25 K B
C720	87-012-195-080		C-CAP,U 100P-50 J CH<EZ,K>
C721	87-012-176-080		C-CAP,U 15P-50 J CH
C722	87-012-176-080		C-CAP,U 15P-50 J CH
C723	87-012-274-080		CHIP CAP,U 1000P-50B
C725	87-012-274-080		CHIP CAP,U 1000P-50B
C727	87-010-196-080		CHIP CAPACITOR,0.1-25
C728	87-A12-063-080		CAP,E 220-10 SMG
C753	87-012-195-080		C-CAP,U 100P-50 J CH<EZ,K>
C755	87-012-286-080		C-CAP,U 0.01-25 K B
C756	87-012-286-080		C-CAP,U 0.01-25 K B
C757	87-012-188-080		C-CAP,U 47P-50 CH
C758	87-012-167-080		C-CAP,U 5P-50 CH
C761	87-010-196-080		CHIP CAPACITOR,0.1-25
C762	87-012-286-080		C-CAP,U 0.01-25 K B<EZ,K>
C763	87-010-829-080		C-CAP,U 0.047-16 Z F
C764	87-012-337-080		C-CAP,U 56P-50 CH<U,HR,C>
C765	87-012-286-080		C-CAP,U 0.01-25 K B
C766	87-012-286-080		C-CAP,U 0.01-25 K B
C768	87-012-286-080		C-CAP,U 0.01-25 K B<EZ,K>
C769	87-A12-071-080		CAP,E 47-25 SMG
C770	87-010-829-080		C-CAP,U 0.047-16 Z F
C771	87-A12-070-080		CAP,E 33-25 SMG
C772	87-010-829-080		C-CAP,U 0.047-16 Z F
C773	87-010-196-080		CHIP CAPACITOR,0.1-25<U,HR,C>
C773	87-015-785-080		CHIP CAPACITOR,0.1-25<EZ,K>
C774	87-A12-062-080		CAP,E 100-10 SMG
C775	87-A12-090-080		CAP,E 4.7-50 SMG
C776	87-012-286-080		C-CAP,U 0.01-25 K B
C777	87-A12-086-080		CAP,E 0.47-50 SMG
C778	87-A12-087-080		CAP,E 1-50 SMG
C779	87-A12-087-080		CAP,E 1-50 SMG
C780	87-010-196-080		CHIP CAPACITOR,0.1-25
C781	87-A12-091-080		CAP,E 10-50 SMG
C782	87-A12-091-080		CAP,E 10-50 SMG
C783	87-012-286-080		C-CAP,U 0.01-25 K B
C784	87-012-286-080		C-CAP,U 0.01-25 K B
C785	87-010-805-080		C-CAP,S 1-16 Z F
C786	87-010-805-080		C-CAP,S 1-16 Z F
C787	87-012-280-080		C-CAP,U 3300P-50 K B
C788	87-012-280-080		C-CAP,U 3300P-50 K B
C789	87-012-275-080		C-CAP,U 1200P-50 B
C790	87-012-275-080		C-CAP,U 1200P-50 B
C791	87-A12-091-080		CAP,E 10-50 SMG
C793	87-012-273-080		C-CAP,U 820P-50 B<U,HR,C>
C793	87-012-274-080		C-CAP,U 1000P-50 KB<EZ,K>
C794	87-A12-092-080		CAP,E 22-50 SMG
C795	87-010-829-080		C-CAP,U 0.047-16 ZF<EZ,K>
C795	87-010-596-080		C-CAP,U 0.047-16 KR<U,HR,C>
C796	87-A12-089-080		CAP,E 3.3-50 SMG
C797	87-012-276-080		C-CAP,U 1500P-50 K B<EZ,K,HR>
C797	87-012-278-080		C-CAP,U 2200P-50 K B<U,C>
C798	87-012-276-080		C-CAP,U 1500P-50 K B<EZ,K,HR>
C798	87-012-278-080		C-CAP,U 2200P-50 K B<U,C>
C799	87-010-829-080		C-CAP,U 0.047-16 Z F
C812	87-012-286-080		C-CAP,U 0.01-25 K B
C813	87-010-197-080		CAP, CHIP 0.01 DM<U,HR,C>
C814	87-012-286-080		C-CAP,U 0.01-25 K B
C819	87-010-197-080		CAP, CHIP 0.01 DM<U,HR,C>
C820	87-A12-071-080		CAP,E 47-25 SMG
C821	87-012-286-080		C-CAP,U 0.01-25 K B
C822	87-012-286-080		C-CAP,U 0.01-25 K B
C823	87-012-286-080		C-CAP,U 0.01-25 K B
C828	87-010-196-080		CHIP CAPACITOR,0.1-25
C829	87-010-196-080		CHIP CAPACITOR,0.1-25
C859	87-012-286-080		C-CAP,U 0.01-25 K B<EZ>
C861	87-012-199-080		C-CAP,U 220P-50 J CH<EZ>
C862	87-012-199-080		C-CAP,U 220P-50 J CH<EZ>
C863	87-012-270-080		C-CAP,U 470P-50 KB<EZ>
C864	87-A12-091-080		CAP,E 10-50 SMG<EZ>
C865	87-010-196-080		CHIP CAPACITOR,0.1-25<EZ>
C866	87-A12-091-080		CAP,E 10-50 SMG<EZ>
C867	87-012-286-080		C-CAP,U 0.01-25 K B<EZ>
C868	87-012-184-080		C-CAP,U 33P-50 J CH<EZ>
C869	87-012-180-080		C-CAP,U 22P-50 J CH<EZ>
C940	87-012-286-080		C-CAP,U 0.01-25 K B<EZ,K>
C942	87-012-172-080		C-CAP,U 10P-50 D CH<EZ,K>
C947	87-012-286-080		C-CAP,U 0.01-25 K B<EZ,K>
C949	87-A10-039-080		C-CAP,U 470P-50 J CH<EZ,K>
C952	87-012-286-080		C-CAP,U 0.01-25 K B<EZ,K>
C958	87-012-286-080		C-CAP,U 0.01-25 K B<EZ,K>
C959	87-010-196-080		CHIP CAPACITOR,0.1-25
C960	87-010-196-080		CHIP CAPACITOR,0.1-25
C961	87-012-170-080		C-CAP,U 8P-50 CH<U,HR,C>
C962	87-A12-087-080		CAP,E 1-50 SMG<EZ,K>
CF801	87-008-261-010		FLTR,CF SFE10.7MA5<U,HR,C>
CF801	87-008-423-010		FLTR,CF SFE10.7MS3G-A<EZ,K>
CF802	87-008-261-010		FLTR,CF SFE10.7MA5<U,HR,C>
CF802	82-785-747-010		CF,MS2 GHY,R<EZ,K>
CN601	87-099-029-010		CONN,12P H BLK 6216
CN602	87-099-211-010		CONN,4P V BLK 6216<EZ>
FFC601	88-912-081-110		FF-CABLE,12P 1.25 80MM
FFC602	88-904-081-110		FF-CABLE,4P 1.25 80MM<EZ>
FFE801	A8-6ZA-19H-030		6ZA-1 FEMENM<EZ,K>
FFE801	A8-8ZA-194-030		8ZA-1 FEMUNM<U,HR,C>
J801	87-A60-657-010		TERMINAL,4P HSP-154V5-02<U,HR,C>
J802	87-033-241-010		TERMINAL,ANT 2P AJ-2040<EZ,K>
L771	87-A50-266-010		COIL,FM DET-2N(TOK)
L772	87-A90-733-010		FLTR,PCFAZH-450(TOK)
L781	87-005-847-080		COIL,2.2UH K CECS
L791	87-A50-027-010		COIL,1 POLE MPX(TOK)<EZ,K)
L792	87-A50-027-010		COIL,1 POLE MPX(TOK)<EZ,K)
L832	87-005-847-080		COIL,2.2UH K CECS
L941	87-A50-020-010		COIL,ANT LW(COI)252KHZ<EZ,K>
L942	87-A50-019-010		COIL,OSC LW(COI)856KHZ<EZ,K>
L981	87-NF4-650-010		COIL,AM PACK4N(TOK)<U,HR,C>
L981	87-NF4-651-110		COIL,AM PACK2N(TOM)<EZ,K>
TC942	87-011-164-010		TRIMMER,CER 30P 4.5X3.9 VCT31<EZ,K>
X721	87-A70-306-010		VIB,XTAL4.5MHZ CSA-309ST<EZ,K,HR,C>
X721	87-A70-061-010		VIB,XTAL 4.500MHZ CSA-309<U>
X750	87-030-394-010		VIB,CER 3.5498MHZ CSA MGF228<EZ,K>
X851	87-A70-091-010		VIB,XTAL 4.332MHz CSA-309<EZ>
JACK C.B			
CN202	87-A60-059-010		CONN,08P V 9604S-08C
FFC202	88-908-121-110		FF-CABLE,8P 1.25 120MM
J201	87-A61-595-010		JACK,PIN 3P R/W/B
J501	87-009-610-010		JACK,PIN 2P WHT W/O SW
MOSW C.B			
CN151	87-A60-153-010		CONN,05P H FE<U>
CN151	87-A60-082-010		CONN,05P H 9604S-05F<EZ,K,HR,C>
M151	87-A90-036-010		MOT ASSY,RF-300CA-11440
S151	87-A90-117-010		SW,PUSH 1-1-1 MPU10371MLB0 MIC
S152	87-A90-117-010		SW,PUSH 1-1-1 MPU10371MLB0 MIC
HP C.B			

REF. NO.	PART NO.	KANRI NO.	DESCRIPTION
C301	87-012-274-080		CHIP CAP,U 1000P-50B<U,EZ,K,C>
C301	87-012-286-080		C-CAP,U 0.01-25 KB<HR>
C302	87-012-274-080		CHIP CAP,U 1000P-50B<U,EZ,K,C>
C302	87-012-286-080		C-CAP,U 0.01-25 KB<HR>
CNA301	8B-CL2-672-010		CONN ASSY,5P EH
J201	87-A60-420-010		JACK,3.5 ST (MSC)

CD-MOTOR C.B

M1	S0-M10-A09-700		MOTOR SLED ASSY
M2	9X-262-576-910		MOTOR GEAR ASSY
PIN3	S2-369-750-000		PLUG,6P
SW1	S4-S13-A01-600		SW,LEAF

RELAY C.B

⚠ C1	87-A10-479-080		CAP,CER 2200P-250 ME KH<HR>
⚠ C2	87-A10-479-080		CAP,CER 2200P-250 ME KH<HR>
CN2	87-A60-619-010		CONN,2P V 2MM JMT<HR>
⚠ RY1	87-A91-281-010		RELAY,AC DC12V OSA-SS-212DM5<HR>

○チップ抵抗部品コード／CHIP RESISTOR PART CODE

チップ抵抗部品コードの成り立ち
Chip Resistor Part Coding

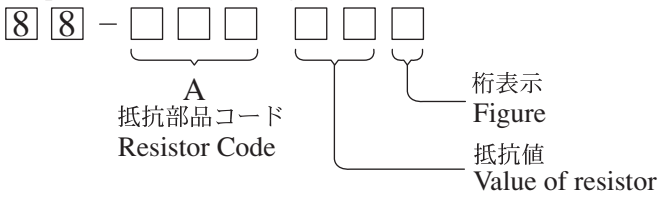

チップ抵抗
Chip resistor

容量 Wattage	種類 Type	許容誤差 Tolerance	記号 Symbol	寸法／Dimensions (mm) 外形／Form	L	W	t	抵抗コード : A Resistor Code : A
1/16W	1005	± 5%	CJ	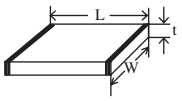	1.0	0.5	0.35	104
1/16W	1608	± 5%	CJ		1.6	0.8	0.45	108
1/10W	2125	± 5%	CJ		2	1.25	0.45	118
1/8W	3216	± 5%	CJ		3.2	1.6	0.55	128

TRANSISTOR ILLUSTRATION

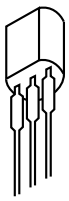

E C B

KTA1266GR

E C B

2SA1979O/Y
2SA1980G
2SC2240GR
2SC5342Y
CC5551

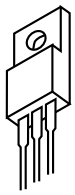

B C E

2SB1677
2SD2619

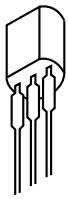

E C B

CSC4115BC

E C B

DTC114ES
2SC4115SRS
2SA933SRS
KTC3199GR

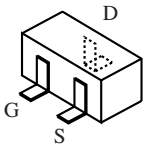

2SK2158

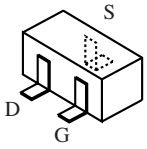

2SK360E

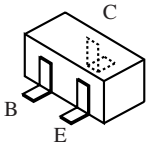

2SA1235F
2SC2714O
2SC3052F
2SC3326B
2SD1306E
CMBT5401
CSD1306E
DTA114EKA
DTC114EKA

DTC114TKA
KRA102S
KRC107S
KTA1504GR
KTC3875GR
RT1P141C
RT1P144C
SBT5401F

A AMP-MICON C.B <U, EZ, K, HR>

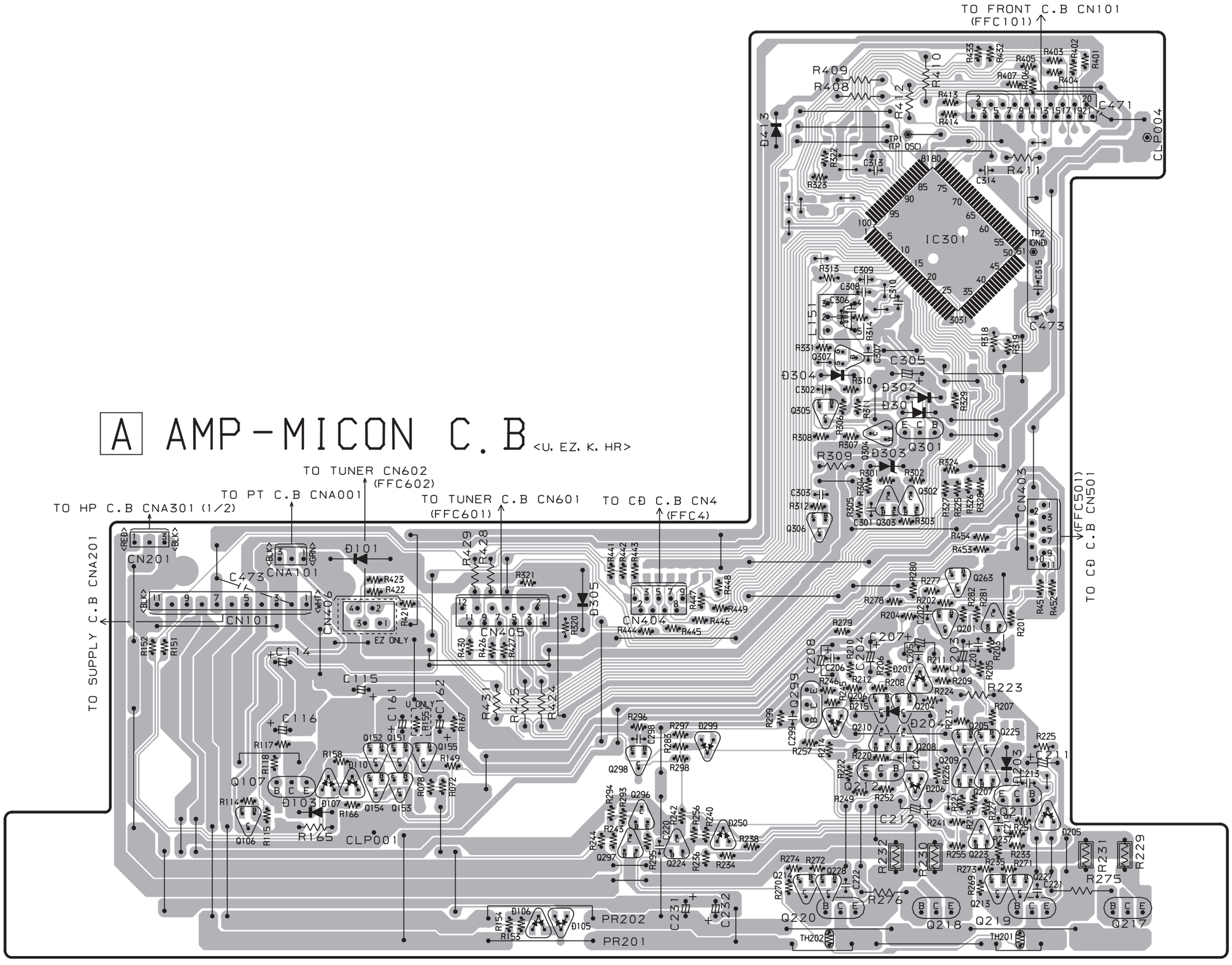

A AMP-MICON C.B <C>

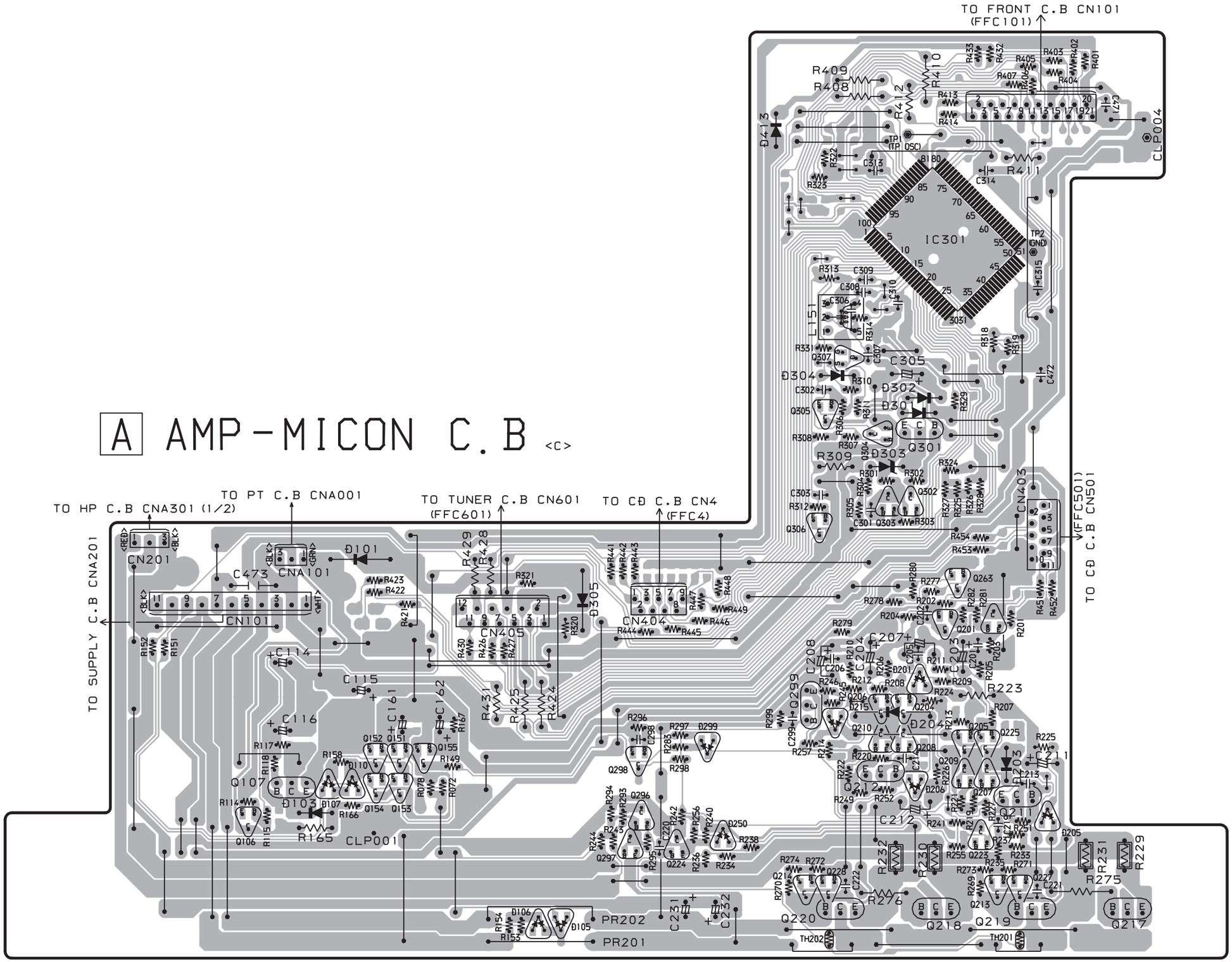

SCHEMATIC DIAGRAM – 1 (AMP – MICON)

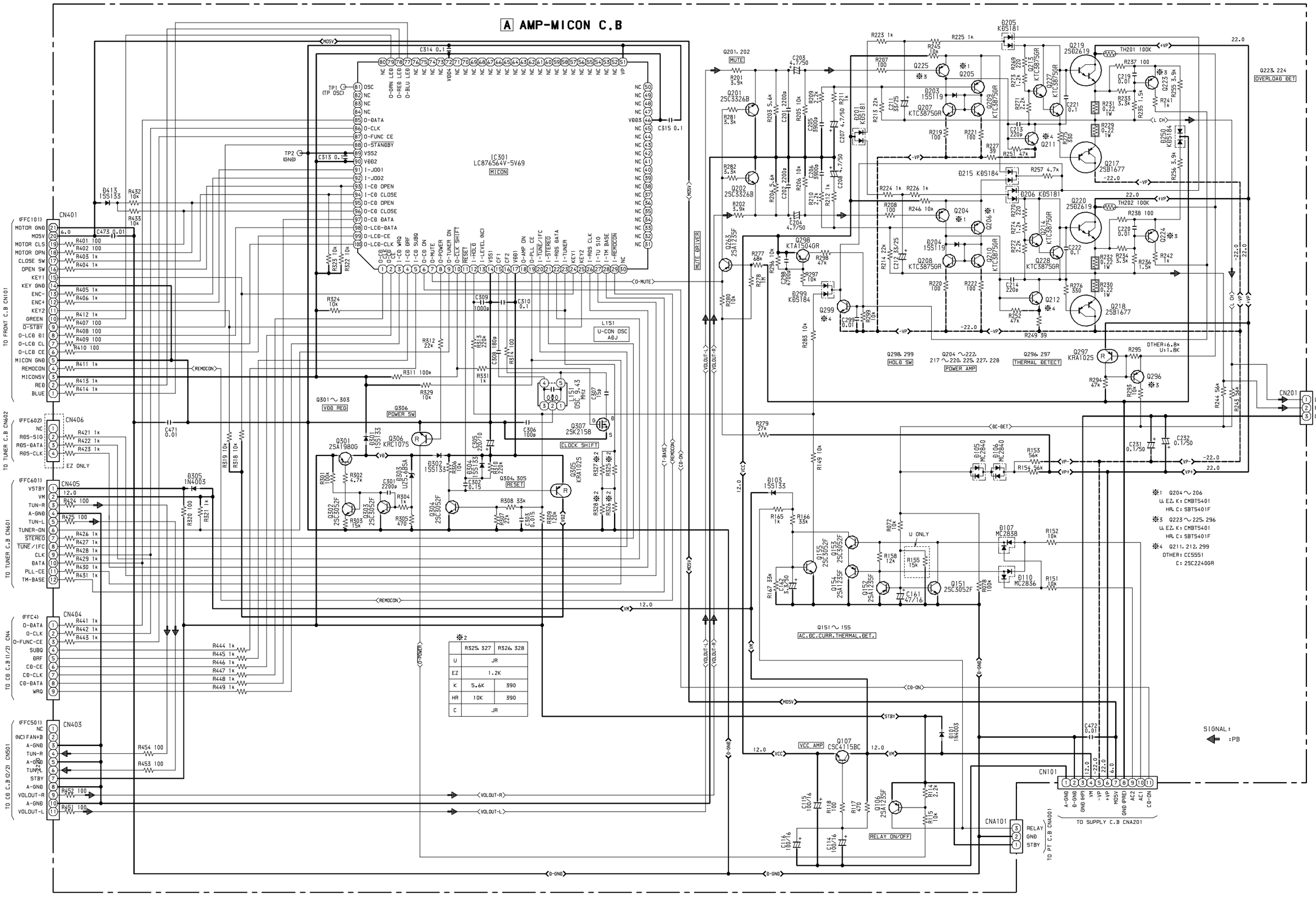

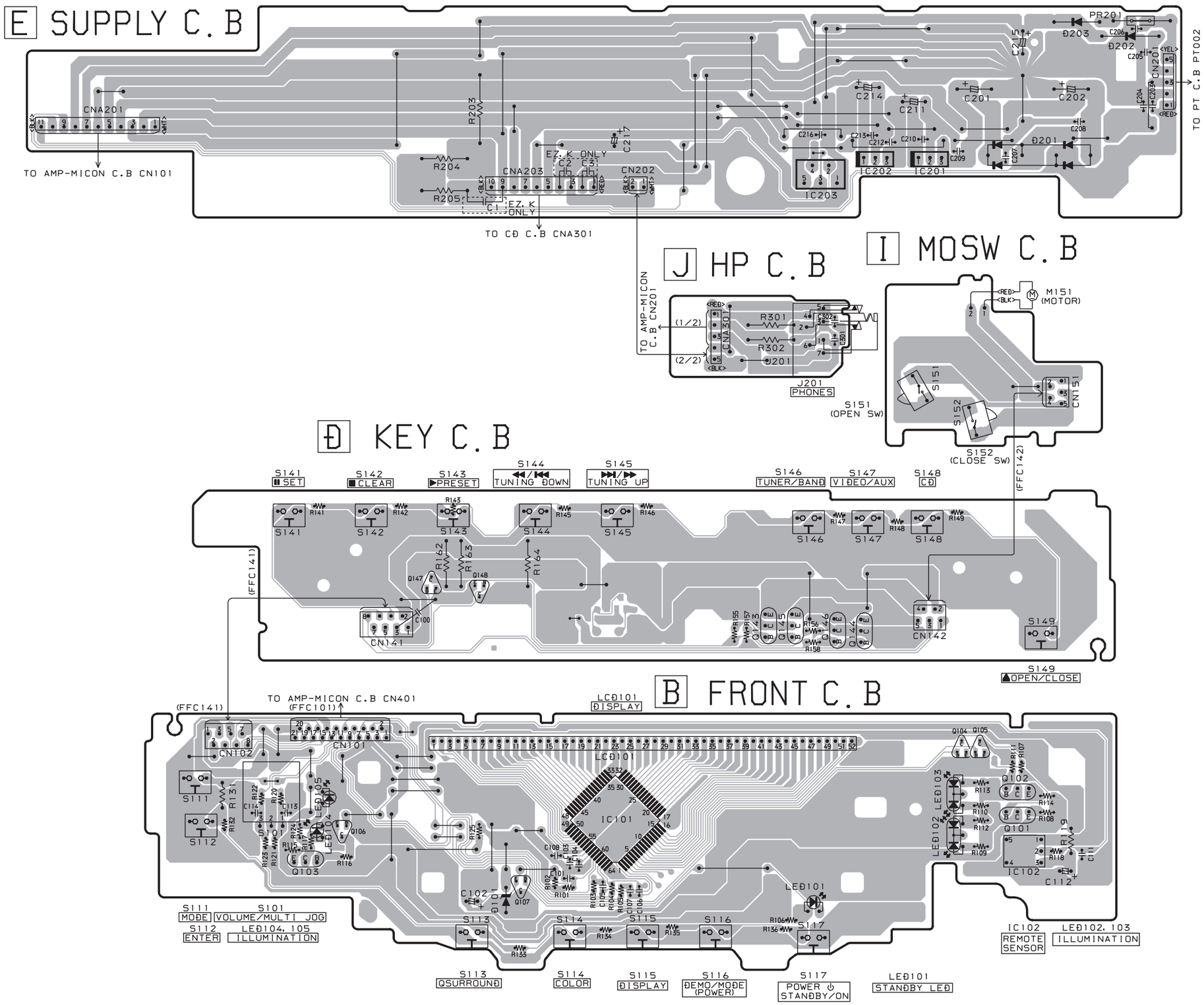
E SUPPLY C.B
CNA201
TO AMP-MICON C.B CN101
R203
R204
R205
CNA203
EZ, K ONLY
C2 C3
C1 EZ, K ONLY
TO CD C.B CNA301
C217
CN202
C214
C211
C201
C202
C216
C213
C212
C210
C209
C208
C207
C204
C205
C206
PR201
D203
D202
D201
CN201
TO PT C.B PT002
IC202
IC201
IC203
J HP C.B
TO AMP-MICON C.B CN201
CNA301
R301
R302
(1/2)
(2/2)
J201
PHONES
I MOSW C.B
M151
(MOTOR)
S151
(OPEN SW)
S152
(CLOSE SW)
CN151
(FFC142)
D KEY C.B
S141 SET
S142 CLEAR
S143 PRESET
S144 TUNING DOWN
S145 TUNING UP
S146 TUNER/BAND
S147 VIDEO/AUX
S148 CD
S149 OPEN/CLOSE
(FFC141)
CN141
CN142
B FRONT C.B
TO AMP-MICON C.B CN401
(FFC101)
LCD101 DISPLAY
CN101
CN102
IC101
IC102
REMOTE SENSOR
LED101
STANDBY LED
LED102, 103
ILLUMINATION
LED104, 105
S111 MODE
S101 VOLUME/MULTI JOG
S112 ENTER
S113 QSURROUND
S114 COLOR
S115 DISPLAY
S116 DEMO/MODE (POWER)
S117 POWER ⏻ STANDBY/ON

32 31 30 29 28 27 26 25 24 23 22 21 20 19 18 17 16 15 14 13 12 11 10 9 8 7 6 5 4 3 2 1

A B C D E F G H I J K L M N O P Q R S T U

E SUPPLY C.B

CNA201
TO AMP-MICON C.B CN101
R203
R204
R205
CNA203
TO CD C.B CNA301
C217
CN202
C214
C211
C201
C202
C216
C213
C212
C210
C209
C208
C207
IC202
IC201
IC203
Ð203
Ð202
Ð201
PR201
C206
C205
C204
C203
CN201
TO PT C.B PT002

J HP C.B

TO AMP-MICON C.B CN201
CNA301
R301
R302
C302
C301
J201
PHONES

I MOSW C.B

M151 (MOTOR)
S151
(OPEN SW)
S152
(CLOSE SW)
CN151
(FFC142)

Ð KEY C.B

S141 SET
S142 CLEAR
S143 PRESET
S144 TUNING DOWN
S145 TUNING UP
S146 TUNER/BAND
S147 VIDEO/AUX
S148 CD
S149 OPEN/CLOSE
(FFC141)
CN141
CN142
C100
C142
Q147
Q148
Q144
R162
R163
R164

B FRONT C.B

TO AMP-MICON C.B CN401
(FFC101)
CN101
CN102
LCD101
DISPLAY
IC101
IC102
REMOTE SENSOR
LED101
STANDBY LED
LED102, 103
ILLUMINATION
LED104, 105
S111 MODE
S112 ENTER
S101 VOLUME/MULTI JOG
S113 QSURROUND
S114 COLOR
S115 DISPLAY
S116 DEMO/MODE (POWER)
S117 POWER ⏻ STANDBY/ON

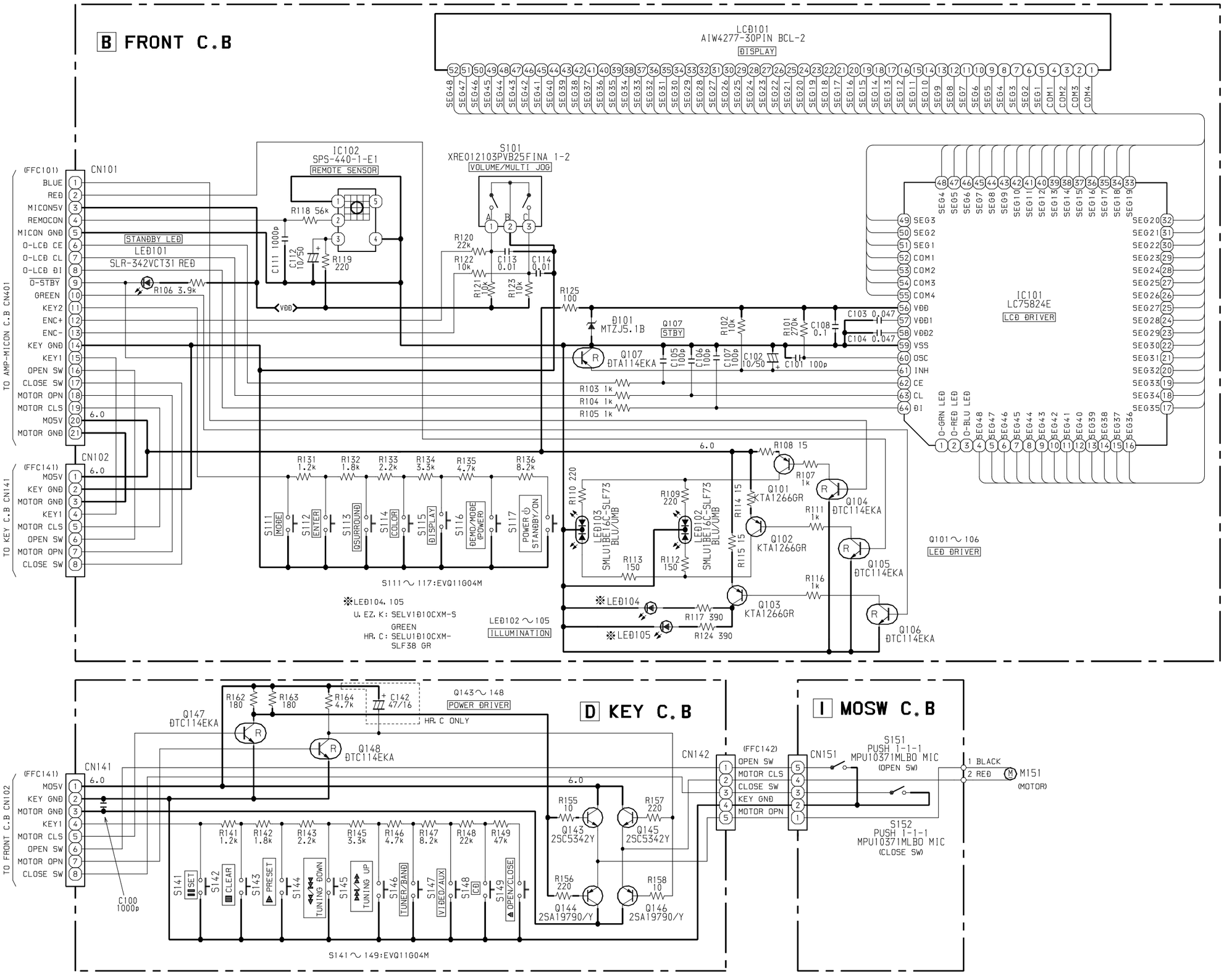
B FRONT C.B
LCD101
AIW4277-30PIN BCL-2
DISPLAY
IC102
SPS-440-1-E1
REMOTE SENSOR
S101
XRE012103PVB25FINA 1-2
VOLUME/MULTI JOG
IC101
LC75824E
LCD DRIVER
CN101
(FFC101)
TO AMP-MICON C.B CN401
BLUE
RED
MICON5V
REMOCON
MICON GND
O-LCD CE
O-LCD CL
O-LCD DI
O-STBY
GREEN
KEY2
ENC+
ENC-
KEY GND
KEY1
OPEN SW
CLOSE SW
MOTOR OPN
MOTOR CLS
MO5V
MOTOR GND
STANDBY LED
LED101
SLR-342VCT31 RED
R106 3.9k
R118 56k
C111 1000p
C112 10/50
R119 220
VDD
R120 22k
R122 10k
C113 0.01
C114 0.01
R121 10k
R123 10k
R125 100
D101 MTZJ5.1B
Q107 STBY
Q107 DTA114EKA
R102 10k
R101 270k
C108 0.1
C103 0.047
C104 0.047
C105 100p
C106 100p
C107 100p
C102 10/50
C101 100p
R103 1k
R104 1k
R105 1k
CN102
(FFC141)
TO KEY C.B CN141
R131 1.2k
R132 1.8k
R133 2.2k
R134 3.3k
R135 4.7k
R136 8.2k
S111 MODE
S112 ENTER
S113 QSURROUND
S114 COLOR
S115 DISPLAY
S116 DEMO/MODE (POWER)
S117 POWER STANDBY/ON
S111~117:EVQ11G04M
R108 15
R107 1k
Q101 KTA1266GR
Q104 DTC114EKA
R111 1k
Q102 KTA1266GR
Q105 DTC114EKA
R116 1k
Q103 KTA1266GR
Q106 DTC114EKA
R110 220
LED103 SML1BE16C-SLF73 BLU/UMB
R109 220
LED102 SML1BE16C-SLF73 BLU/UMB
R114 15
R115 15
R113 150
R112 150
LED104
LED105
R117 390
R124 390
LED102~105 ILLUMINATION
※LED104, 105
U, EZ, K: SELV1D10CXM-S
GREEN
HR, C: SELU1D10CXM-SLF38 GR
Q101~106 LED DRIVER
D KEY C.B
I MOSW C.B
CN141
(FFC141)
TO FRONT C.B CN102
C100 1000p
R162 180
R163 180
R164 4.7k
C142 47/16
HR, C ONLY
Q143~148 POWER DRIVER
Q147 DTC114EKA
Q148 DTC114EKA
R141 1.2k
R142 1.8k
R143 2.2k
R145 3.3k
R146 4.7k
R147 8.2k
R148 22k
R149 47k
S141 SET
S142 CLEAR
S143 PRESET
S144
S145 TUNING DOWN
TUNING UP
S146 TUNER/BAND
S147 VIDEO/AUX
S148 CD
S149 OPEN/CLOSE
S141~149:EVQ11G04M
R155 10
R157 220
Q143 2SC5342Y
Q145 2SC5342Y
R156 220
R158 10
Q144 2SA19790/Y
Q146 2SA19790/Y
CN142
(FFC142)
OPEN SW
MOTOR CLS
CLOSE SW
KEY GND
MOTOR OPN
CN151
S151 PUSH 1-1-1 MPU10371MLBO MIC (OPEN SW)
S152 PUSH 1-1-1 MPU10371MLBO MIC (CLOSE SW)
1 BLACK
2 RED
M151 (MOTOR)

SCHEMATIC DIAGRAM – 3 (SUPPLY / HP)

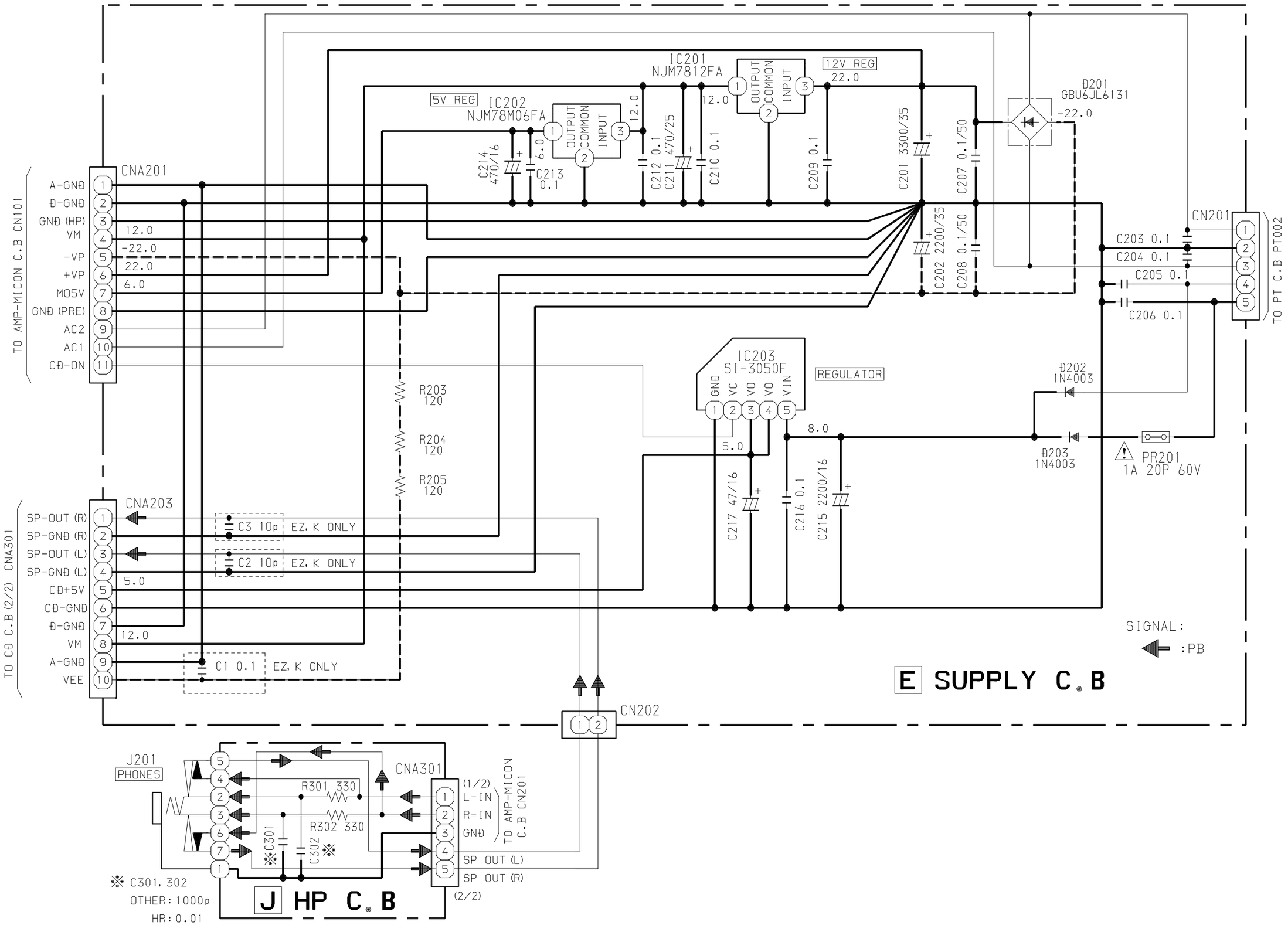

32 31 30 29 28 27 26 25 24 23 22 21 20 19 18 17 16 15 14 13 12 11 10 9 8 7 6 5 4 3 2 1

A B C D E F G H I J K L M N O P Q R S T U

C CD C.B <U, EZ, K>

TO CD PICK UP ASSY CN1 (FFC1)

TO CD-MOTOR C.B PIN3 (CON2)

TO AMP-MICON C.B CN403 (FFC501)

TO SUPPLY C.B CNA203

TO-AMP-MICON C.B CN404 (FFC4)

(FFC202)

(FFC202)

TO FAN60

IC701 DIGITAL OUT (OPTICAL)

J202 SPEAKERS
SPEAKER IMP:6Ω

H JACK C.B <U, EZ, K>

J501 VIDEO/AUX IN

J201 LINE OUT

SUPER WOOFER

32 31 30 29 28 27 26 25 24 23 22 21 20 19 18 17 16 15 14 13 12 11 10 9 8 7 6 5 4 3 2 1

A B C D E F G H I J K L M N O P Q R S T U

C CD C.B <HR, C>

TO CD PICK UP ASSY
CN1
(FFC1)

TO CD-MOTOR C.B
PIN3
(CON2)

TO AMP-MICON C.B
CN403
(FFC501)

TO SUPPLY C.B
CNA203

TO AMP-MICON C.B
CN404
(FFC4)

(FFC202)

(FFC202)

TO FAN60

IC701
DIGITAL OUT
(OPTICAL)

J202
SPEAKERS
SPEAKER IMP:6Ω

H JACK C.B <HR, C>

J501
VIDEO/AUX IN

J201
LINE OUT

SUPER WOOFER

K CD-MOTOR C.B

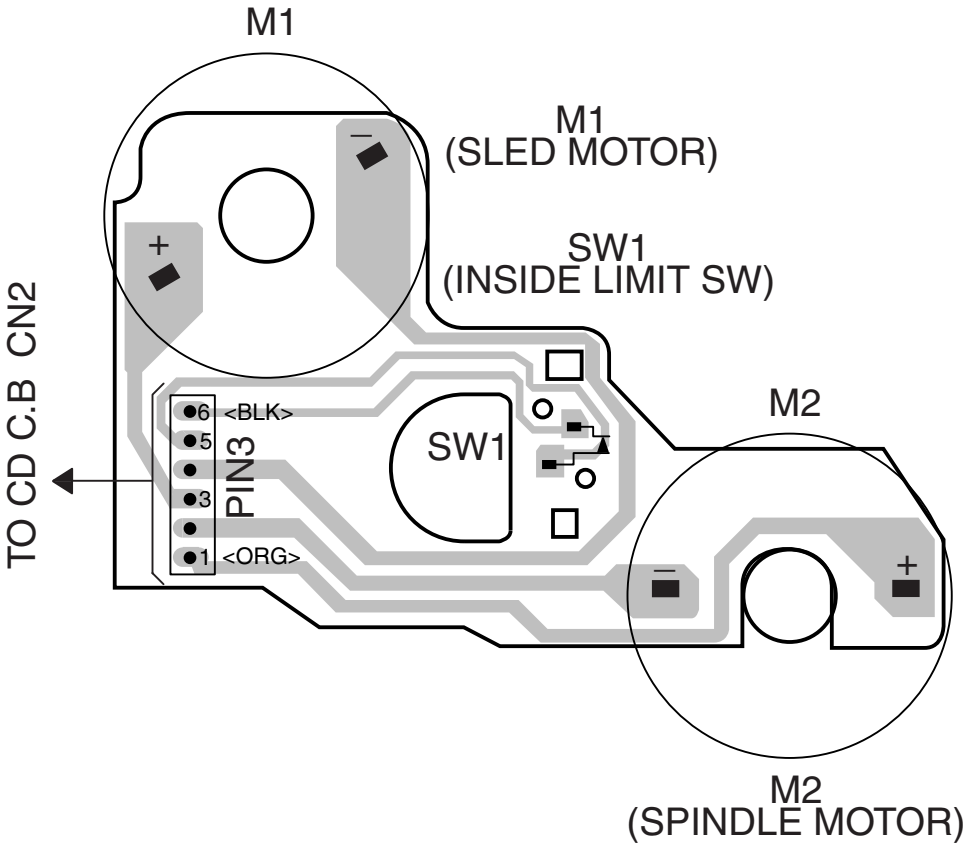

PICK UP ASSY
SF-P101NR

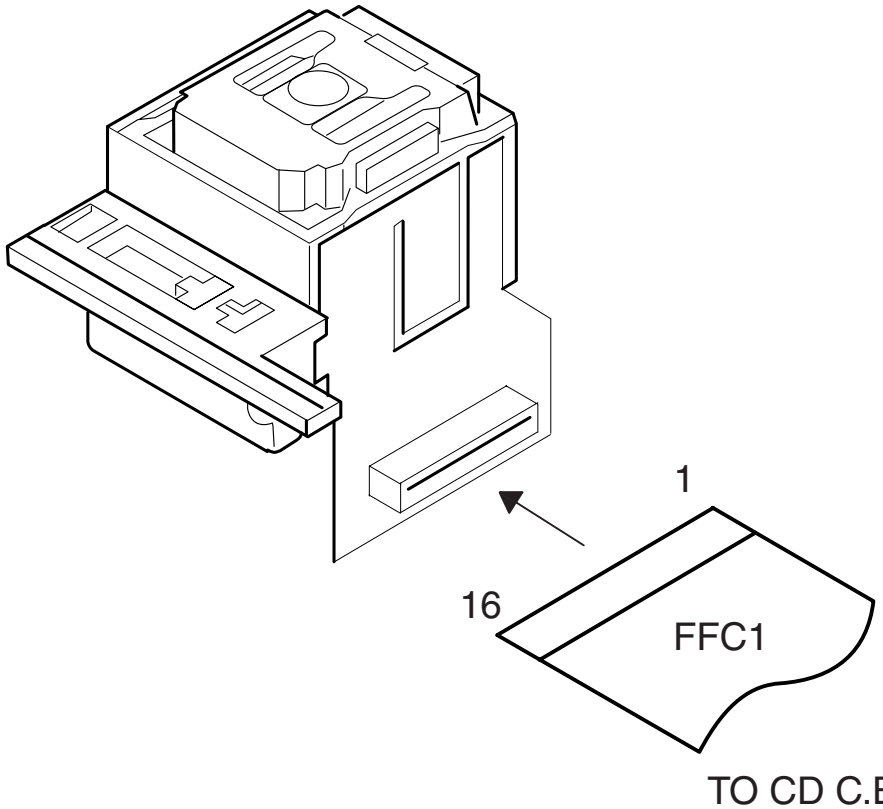

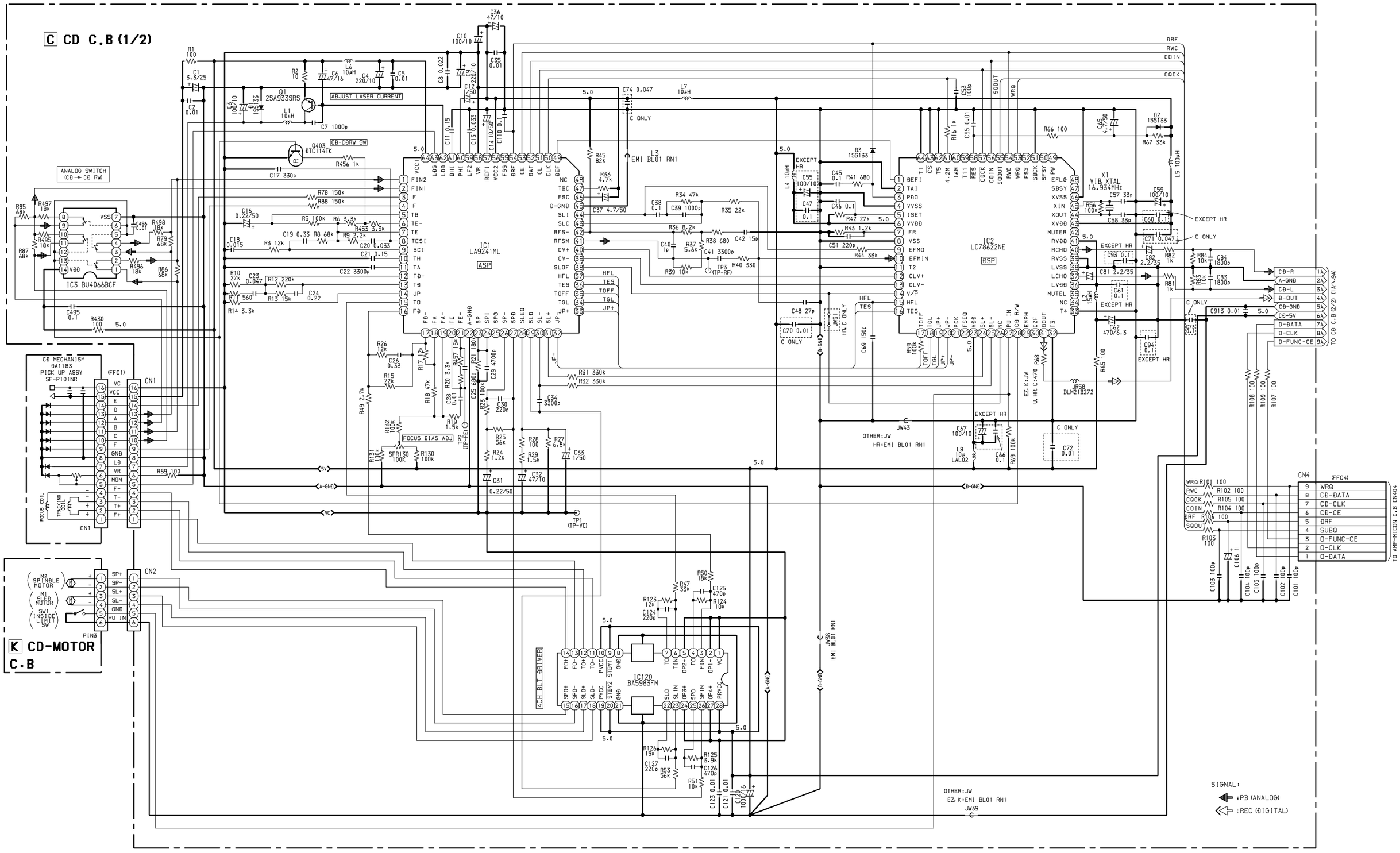
C CD C.B (1/2)
IC1 LA9241ML ASP
IC2 LC78622NE DSP
X1 VIB. XTAL 16.934MHz
IC3 BU4066BCF
ANALOG SWITCH (CD→CD RW)
ADJUST LASER CURRENT
CD-CDRW SW
FOCUS BIAS ADJ
EXCEPT HR
C ONLY
CD MECHANISM DA11B3 PICK UP ASSY SF-P101NR
CN1
CN2
CN4
M2 SPINDLE MOTOR
M1 SLED MOTOR
SW1 INSIDE LIMIT SW
FOCUS COIL
TRACKING COIL
K CD-MOTOR C.B
IC120 BA5983FM
4CH BLT DRIVER
OTHER:JW HR:EMI BL01 RN1
EZ.K:EM1 BL01 RN1 JW39
SIGNAL: :PB (ANALOG) :REC (DIGITAL)
TO CD C.B (2/2) (1A~9A)
TO AMP-MICON C.B CN404

SCHEMATIC DIAGRAM – 5 (CD 2 / 2 / JACK)

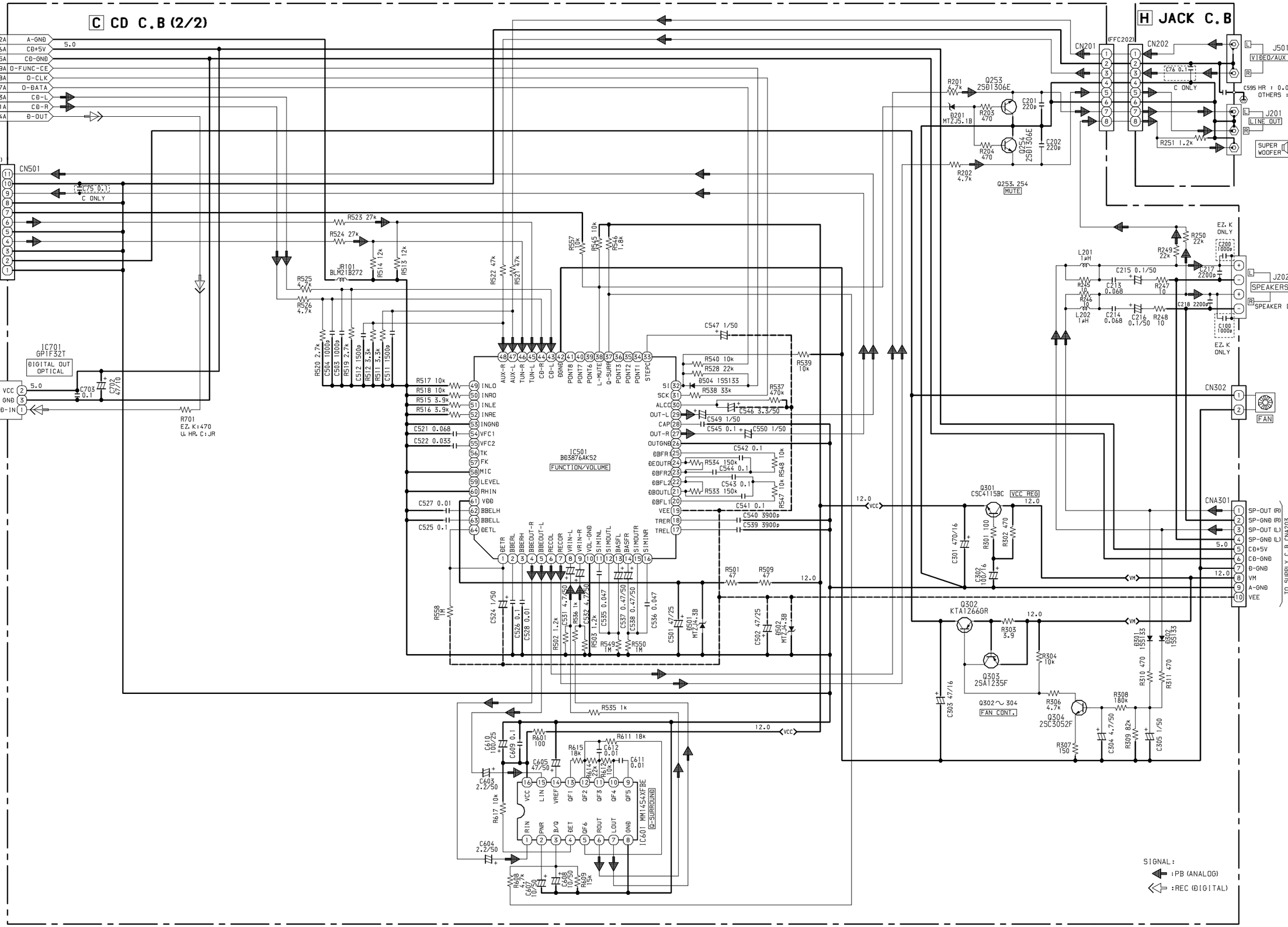

F PT C.B <U, EZ, K, C>

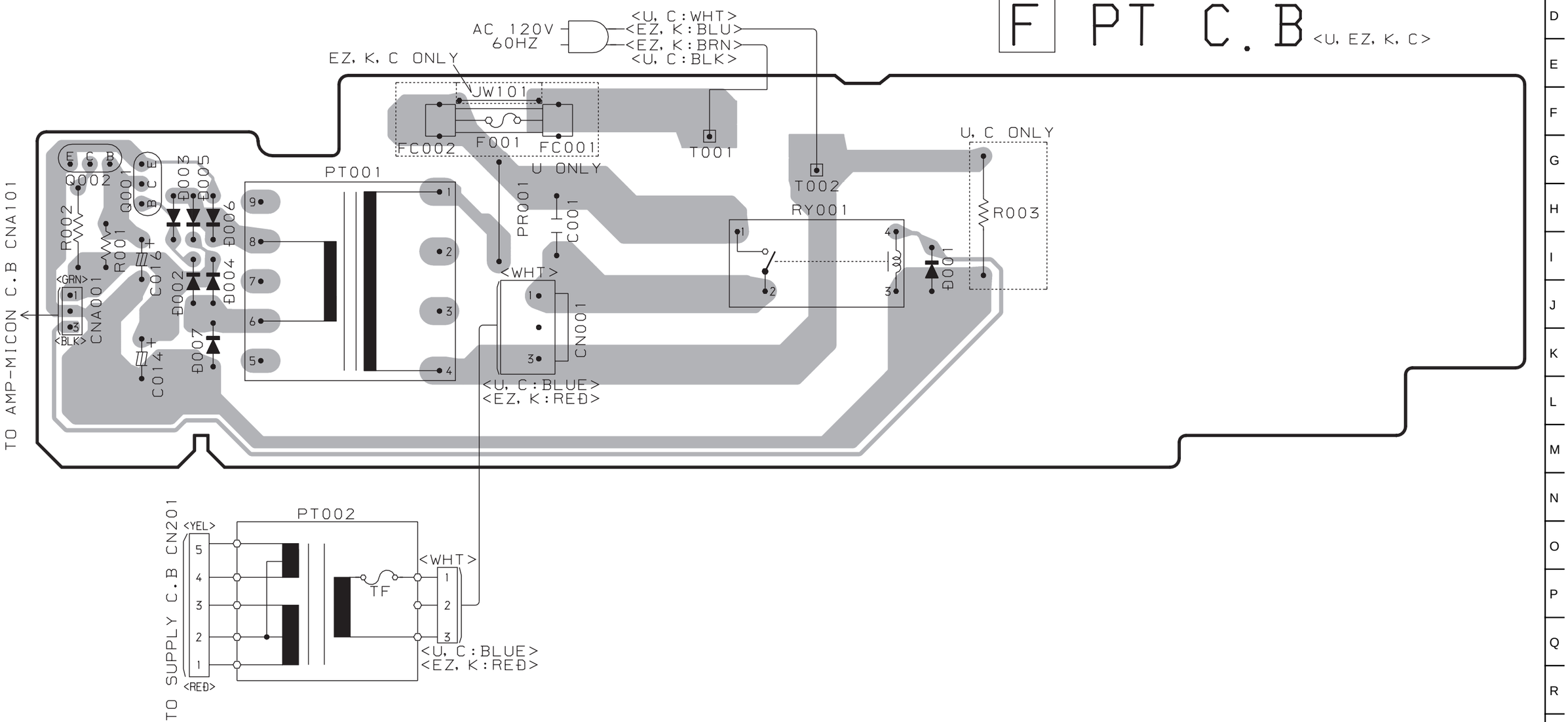
AC 120V
60HZ
<U, C : WHT>
<EZ, K : BLU>
<EZ, K : BRN>
<U, C : BLK>
EZ, K, C ONLY
UW101
FC002
F001
FC001
T001
U, C ONLY
T002
PT001
U ONLY
PR001
C001
RY001
R003
Q002
Q001
R002
R001
D003
D005
D006
D002
D004
D007
D001
C016
C014
CNA001
<GRN>
<BLK>
<WHT>
CN001
<U, C : BLUE>
<EZ, K : REÐ>
TO AMP-MICON C.B CNA101
PT002
<YEL>
<REÐ>
TF
TO SUPPLY C.B CN201

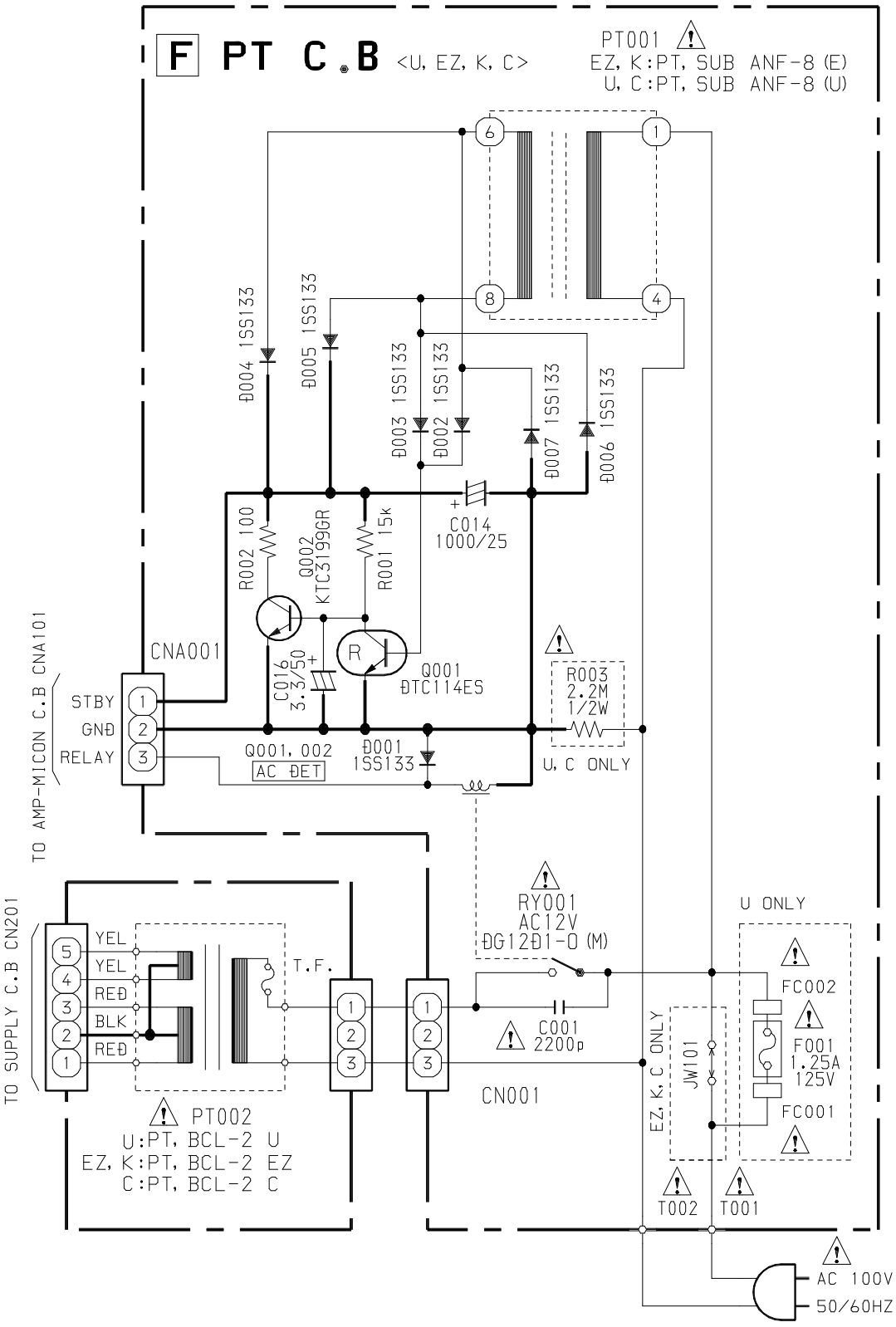
F PT C.B <U, EZ, K, C>
PT001
EZ, K:PT, SUB ANF-8 (E)
U, C:PT, SUB ANF-8 (U)
ĐD04 1SS133
ĐD05 1SS133
ĐD03 1SS133
ĐD02 1SS133
ĐD07 1SS133
ĐD06 1SS133
R002 100
Q002 KTC3199GR
R001 15k
C014 1000/25
CNA001
C016 3.3/50
Q001 ĐTC114ES
R003 2.2M 1/2W
U, C ONLY
STBY
GNĐ
RELAY
TO AMP-MICON C.B CNA101
Q001, 002 AC ĐET
ĐD01 1SS133
RY001 AC12V ĐG12Đ1-O (M)
U ONLY
FC002
F001 1.25A 125V
FC001
TO SUPPLY C.B CN201
YEL
YEL
REĐ
BLK
REĐ
T.F.
C001 2200p
CN001
EZ, K, C ONLY
JW101
PT002
U:PT, BCL-2 U
EZ, K:PT, BCL-2 EZ
C:PT, BCL-2 C
T002
T001
AC 100V
50/60HZ

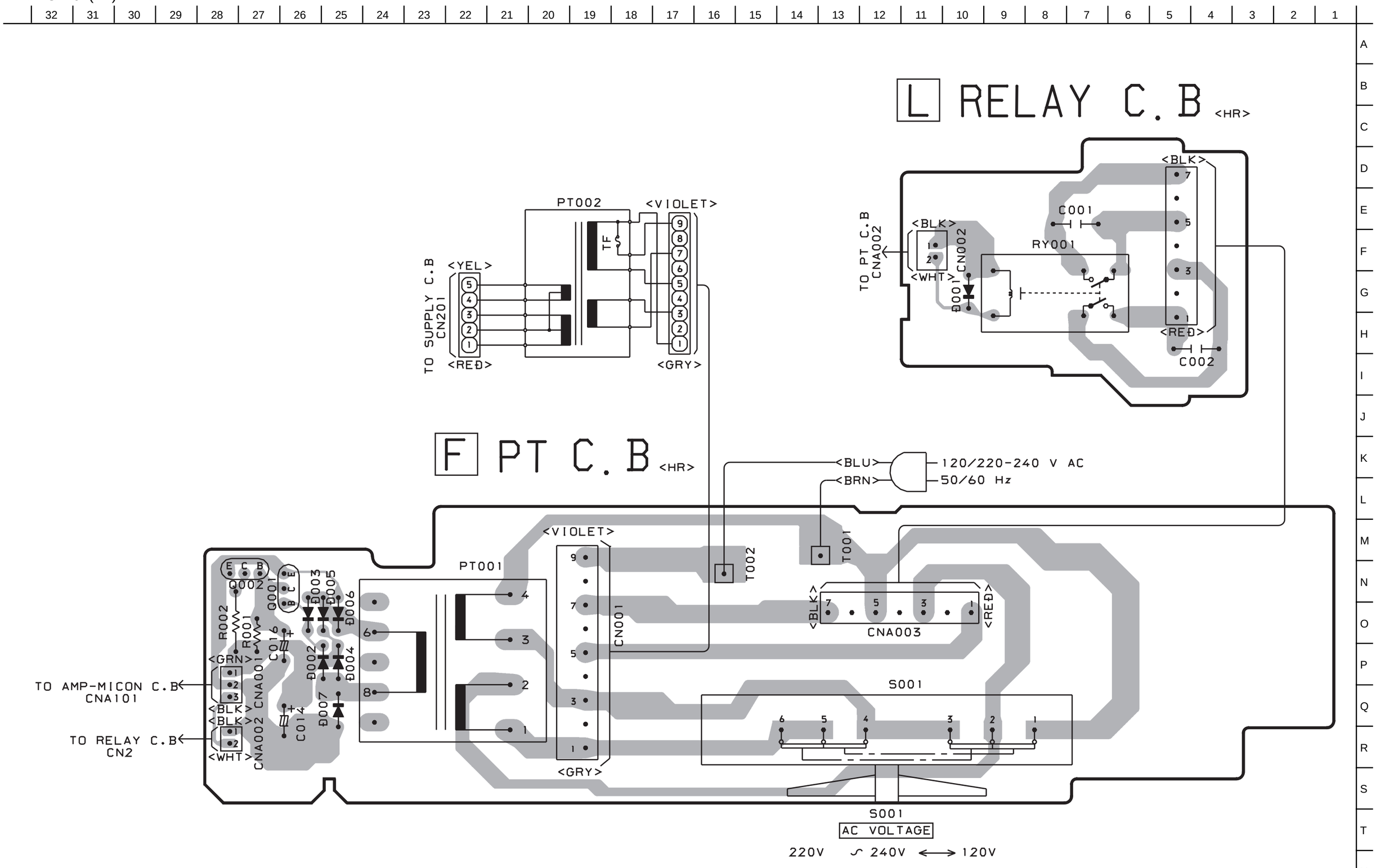
L RELAY C.B <HR>
F PT C.B <HR>
PT002
<VIOLET>
TF
<YEL>
TO SUPPLY C.B
CN201
<RED>
<GRY>
<BLK>
TO PT C.B
CNA002
<WHT>
CN002
D001
RY001
C001
C002
<BLU>
<BRN>
120/220-240 V AC
50/60 Hz
T001
T002
PT001
CN001
CNA003
S001
Q002
Q001
R002
R001
C016
C014
D002
D003
D004
D005
D006
D007
<GRN>
CNA001
CNA002
TO AMP-MICON C.B
CNA101
TO RELAY C.B
CN2
AC VOLTAGE
220V 240V 120V

SCHEMATIC DIAGRAM – 7 (PT) <HR>

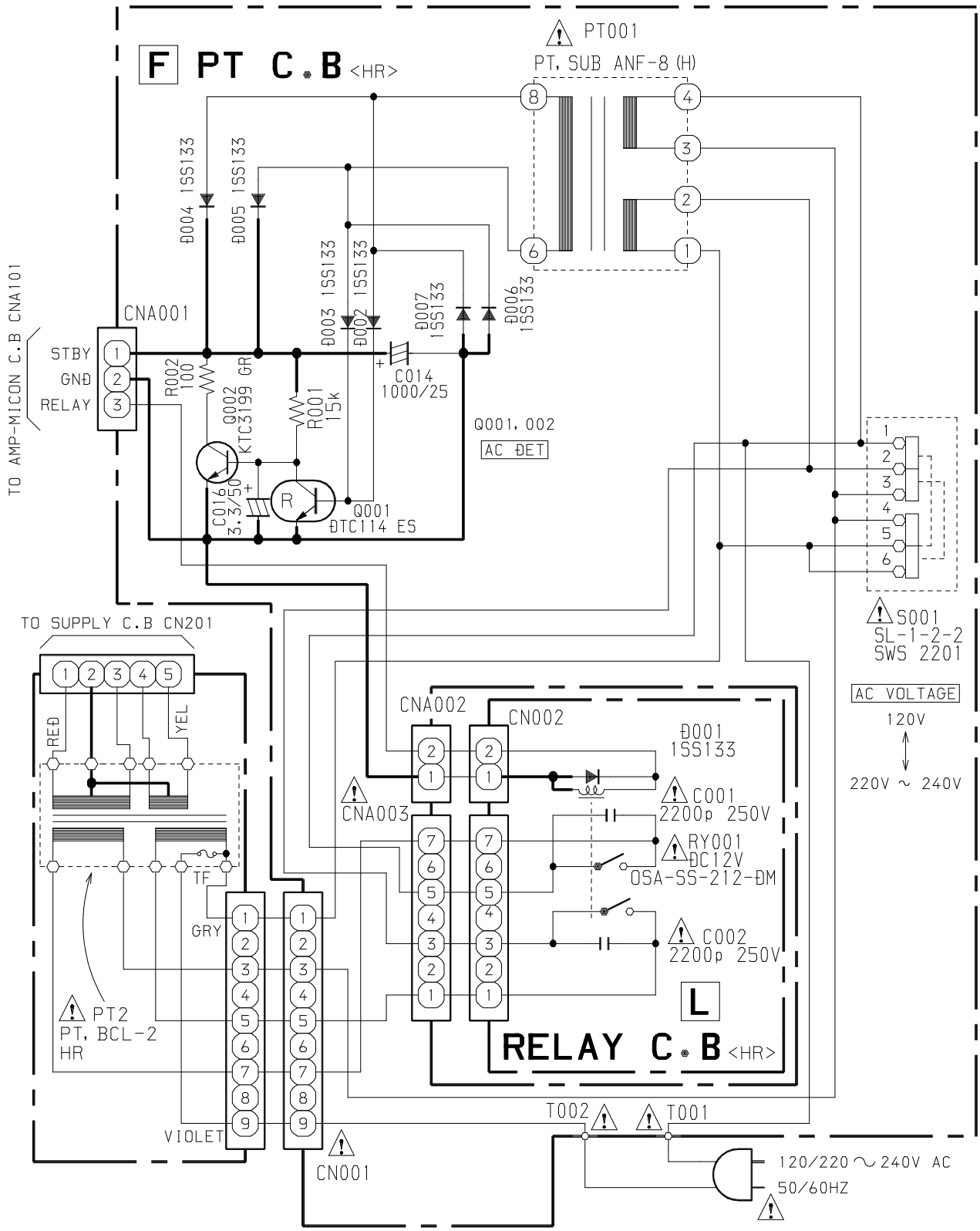

15 14 13 12 11 10 9 8 7 6 5 4 3 2 1

A B C D E F G H I J K L M N O P Q R S T U

G TUNER C.B <U, HR, C>

TO AMP-MICON C.B CN405 (FFC601)

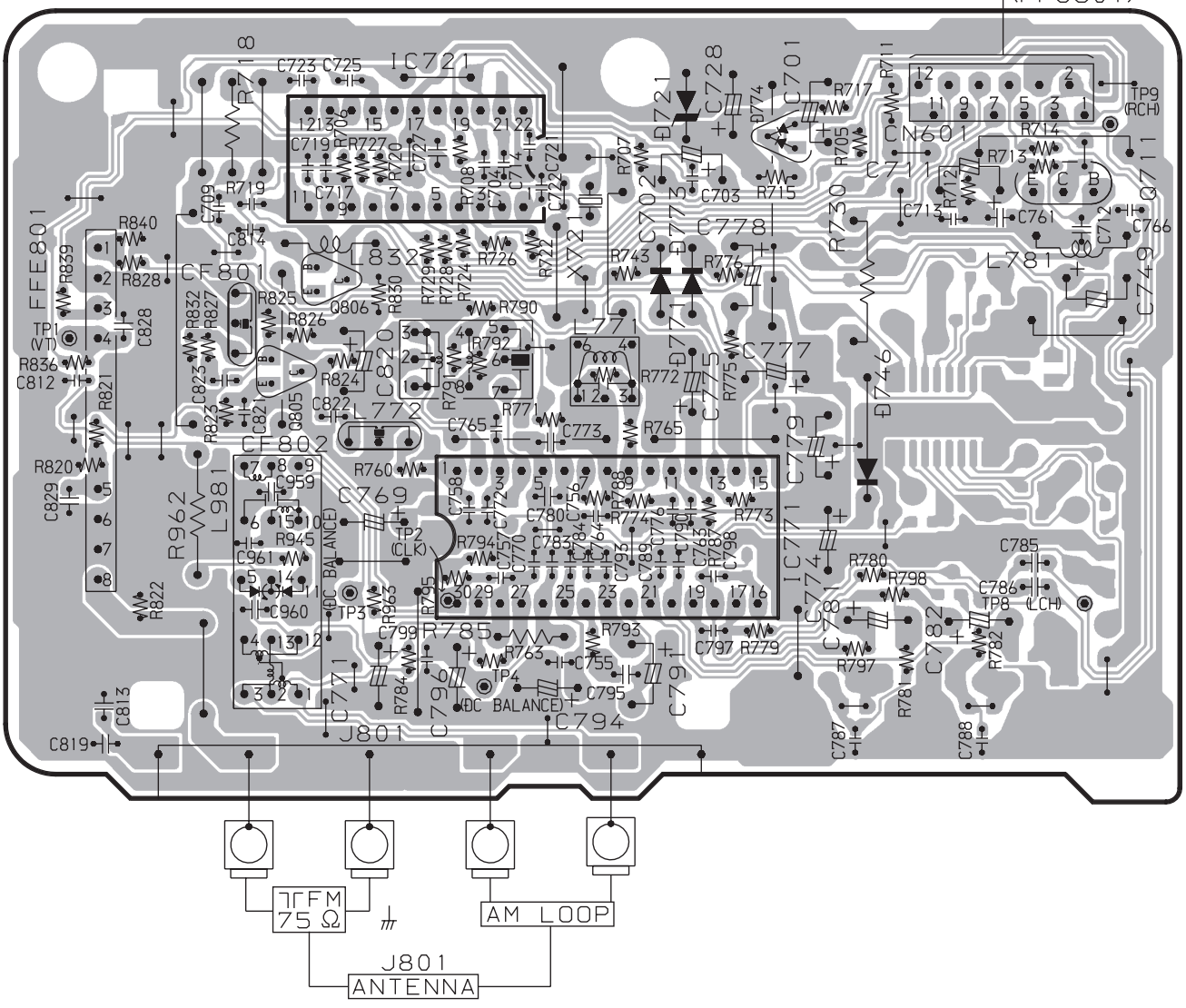

SCHEMATIC DIAGRAM – 8 (TUNER) <U, HR, C>

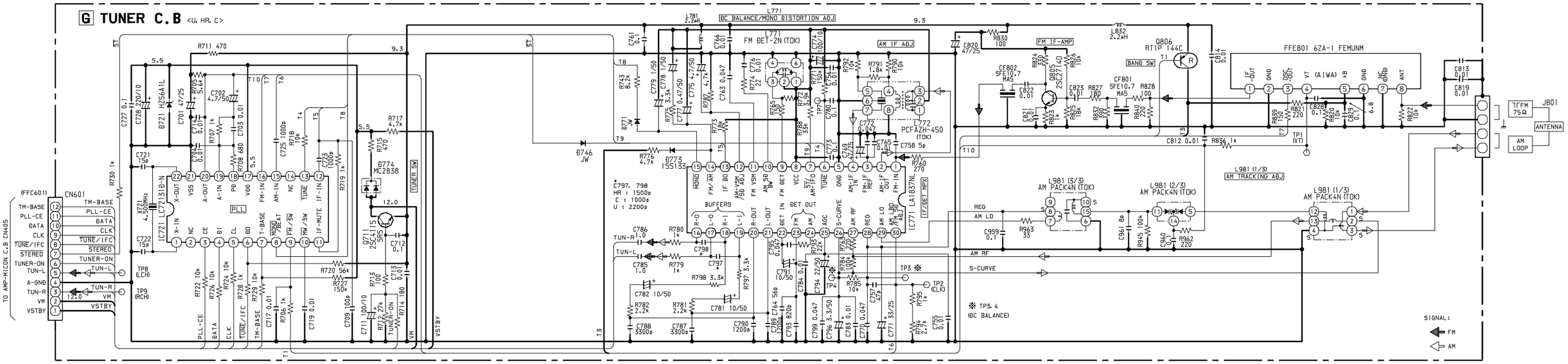

15 14 13 12 11 10 9 8 7 6 5 4 3 2 1

A B C D E F G H I J K L M N O P Q R S T U

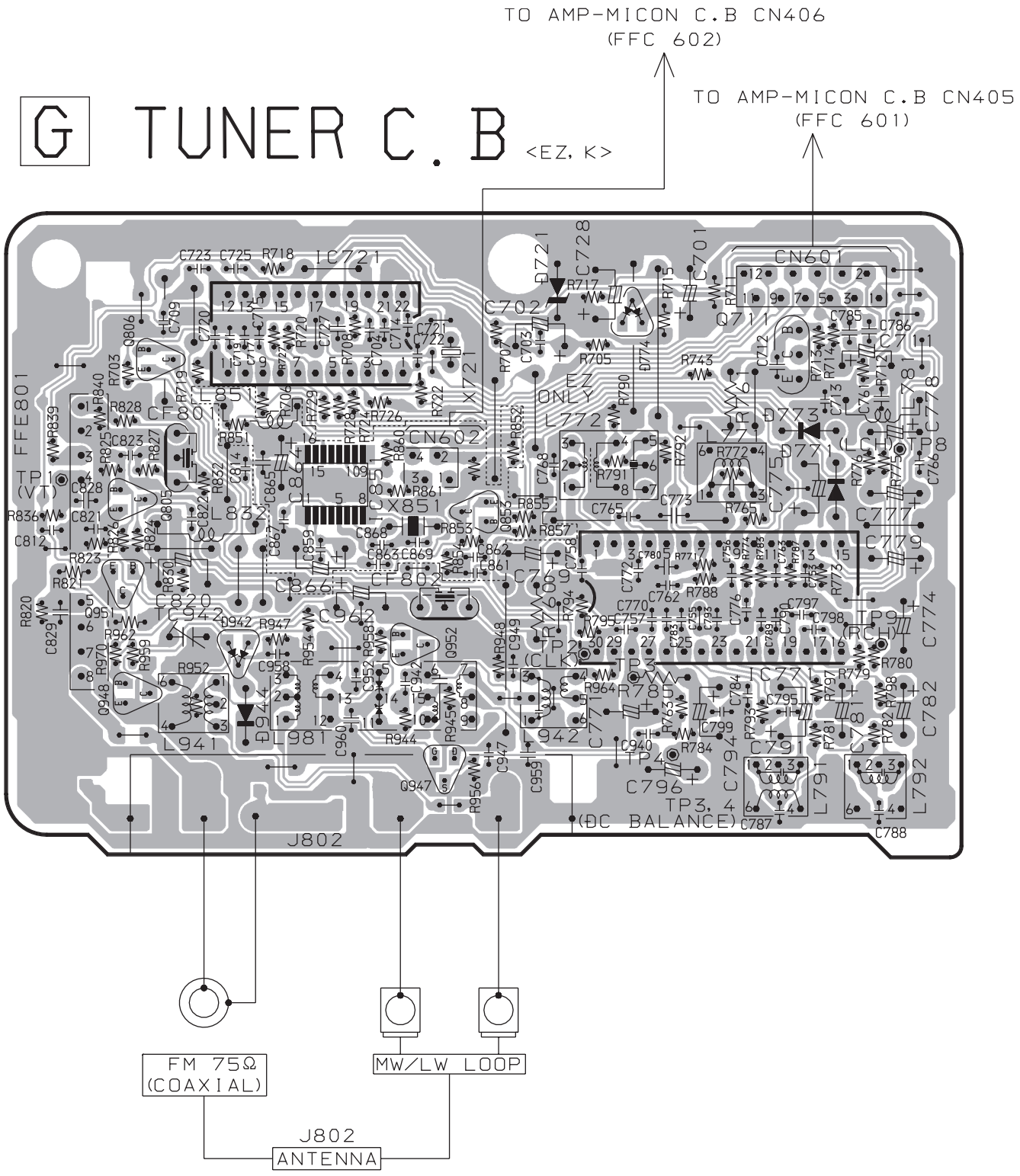

SCHEMATIC DIAGRAM – 9 (TUNER) <EZ, K>

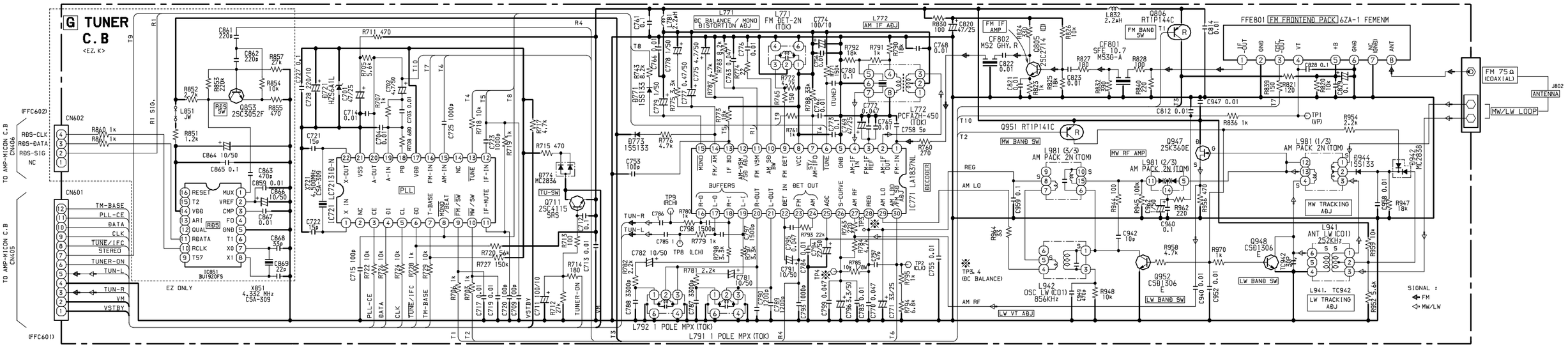

IC BLOCK DIAGRAM

IC, BU1920FS

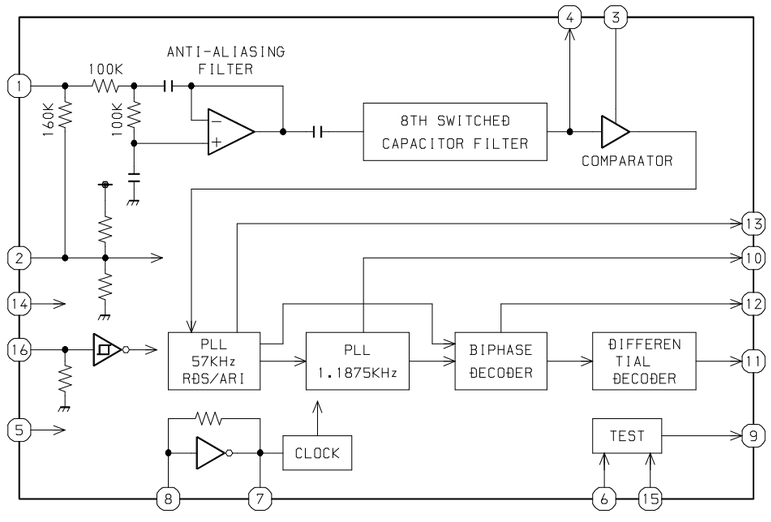

IC, SI-3050F

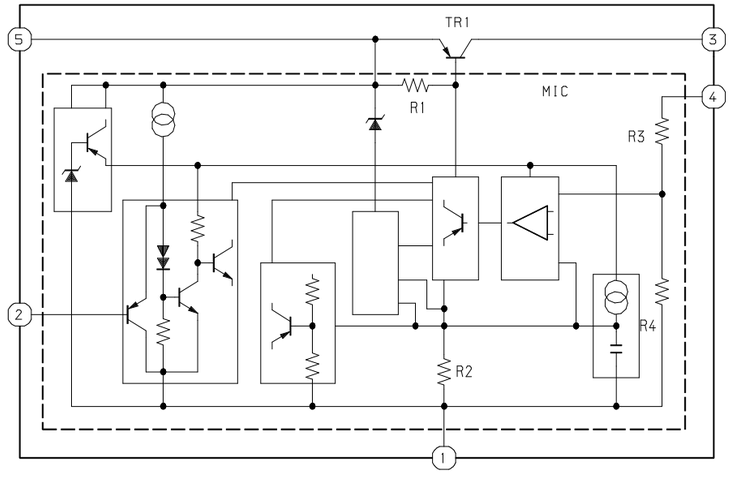

IC, MM1454XFBE

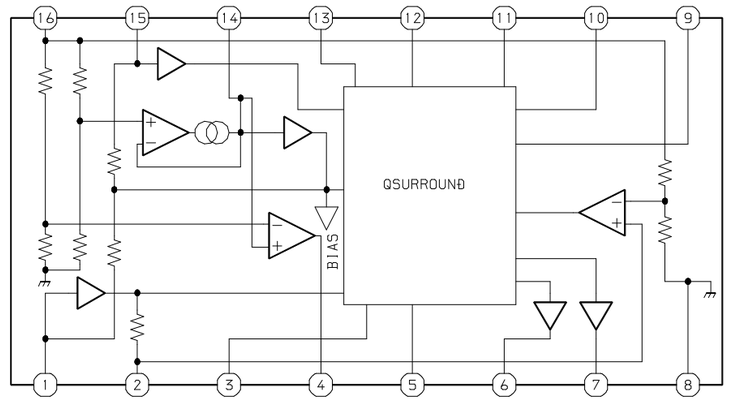

IC, BD3876AKS2

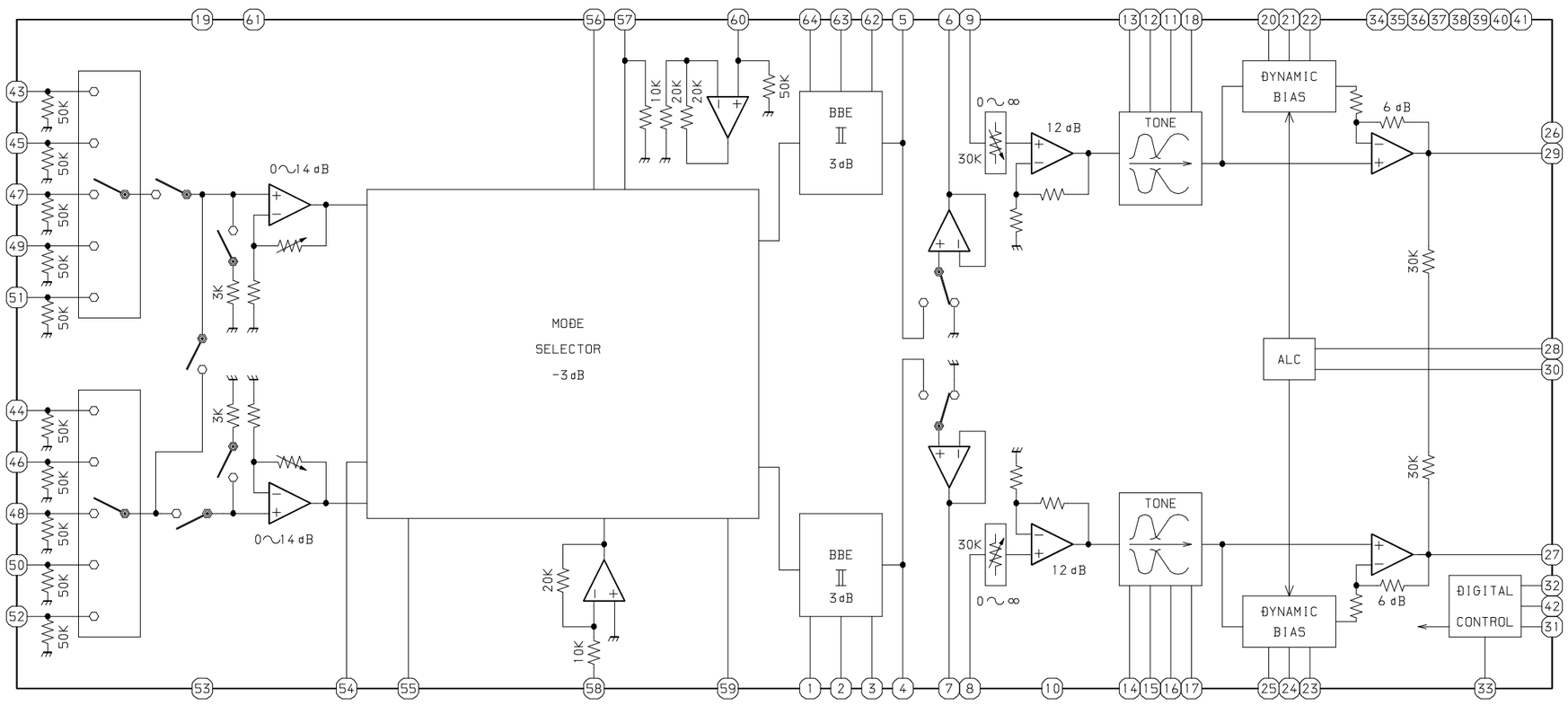

IC, LC72131Đ-N

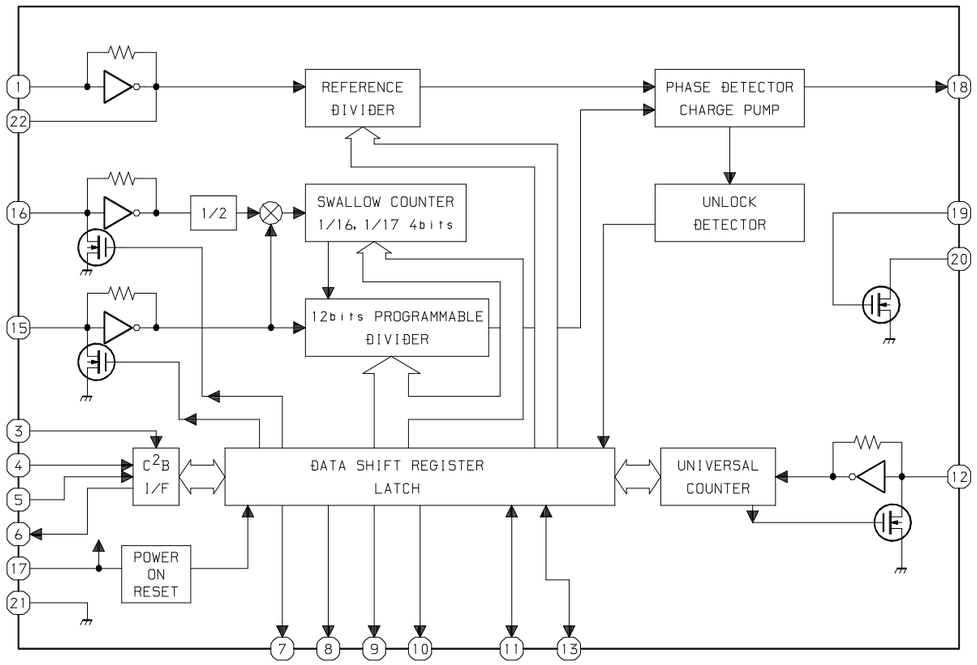

IC, LC75824E

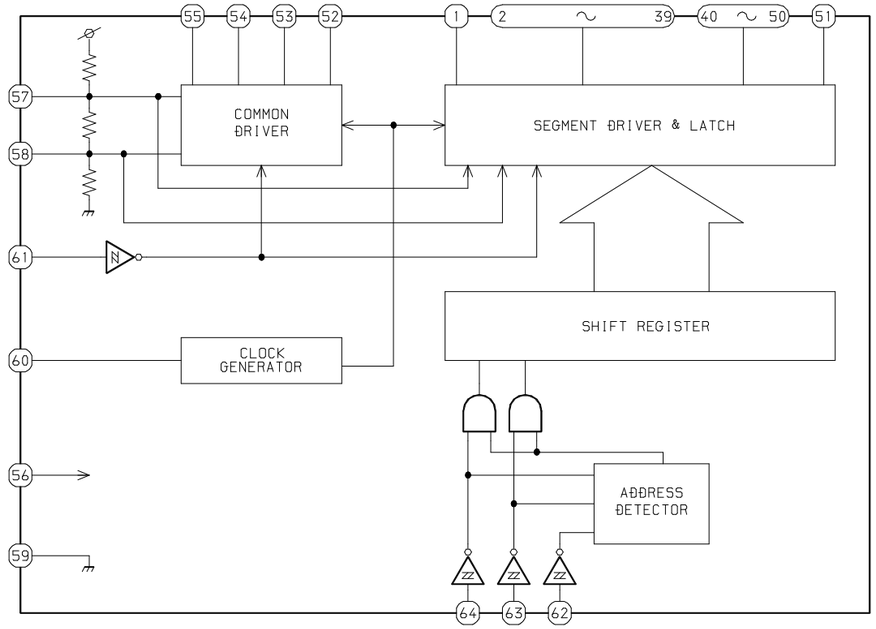

IC, LA1837NL

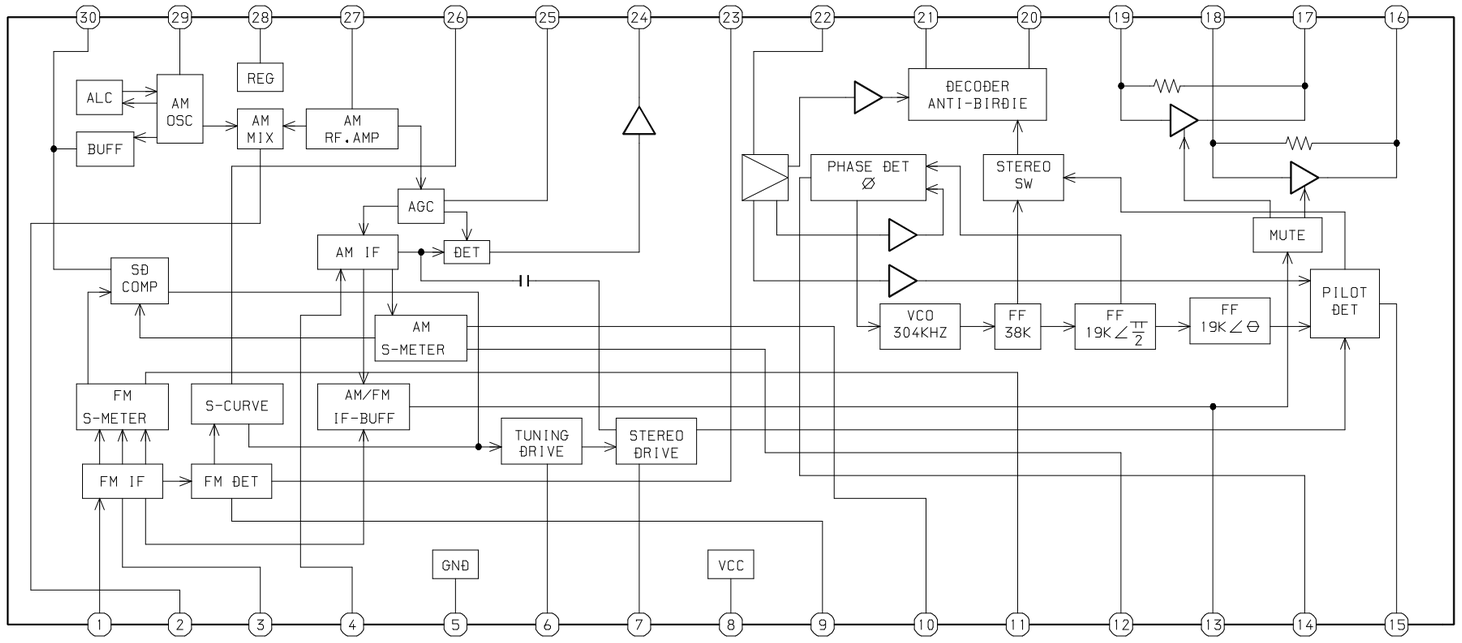

IC, BA5983FM

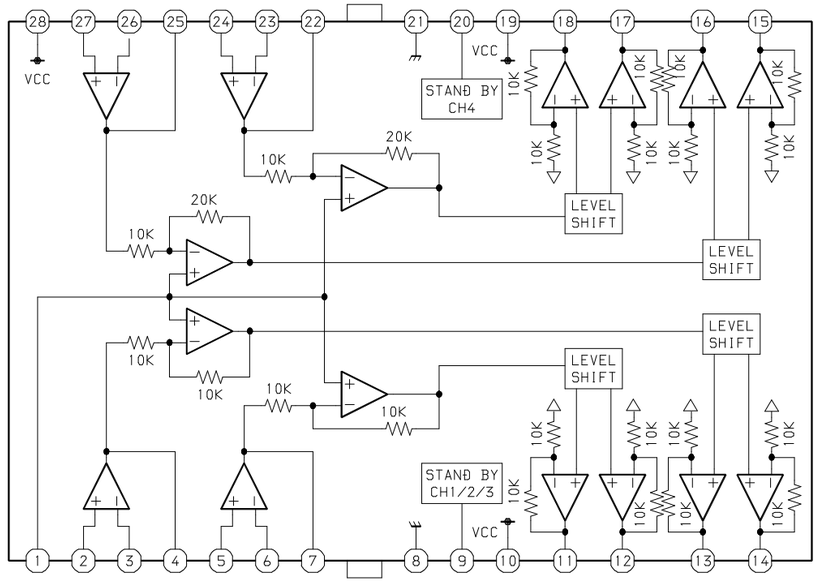

LCD DIAGRAM

PATTERN FIGURE

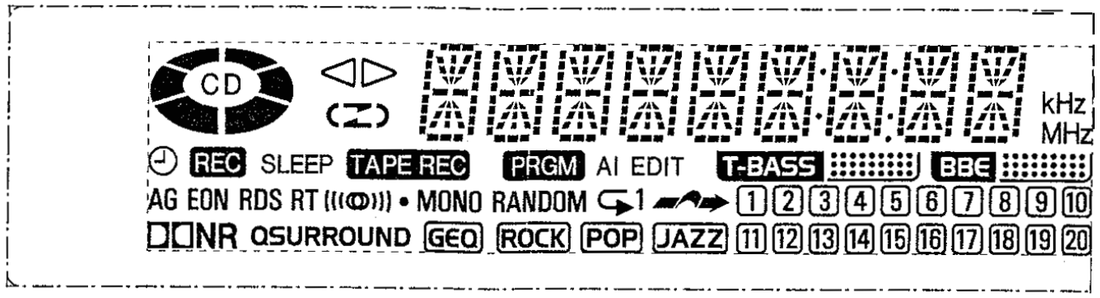

WIRING

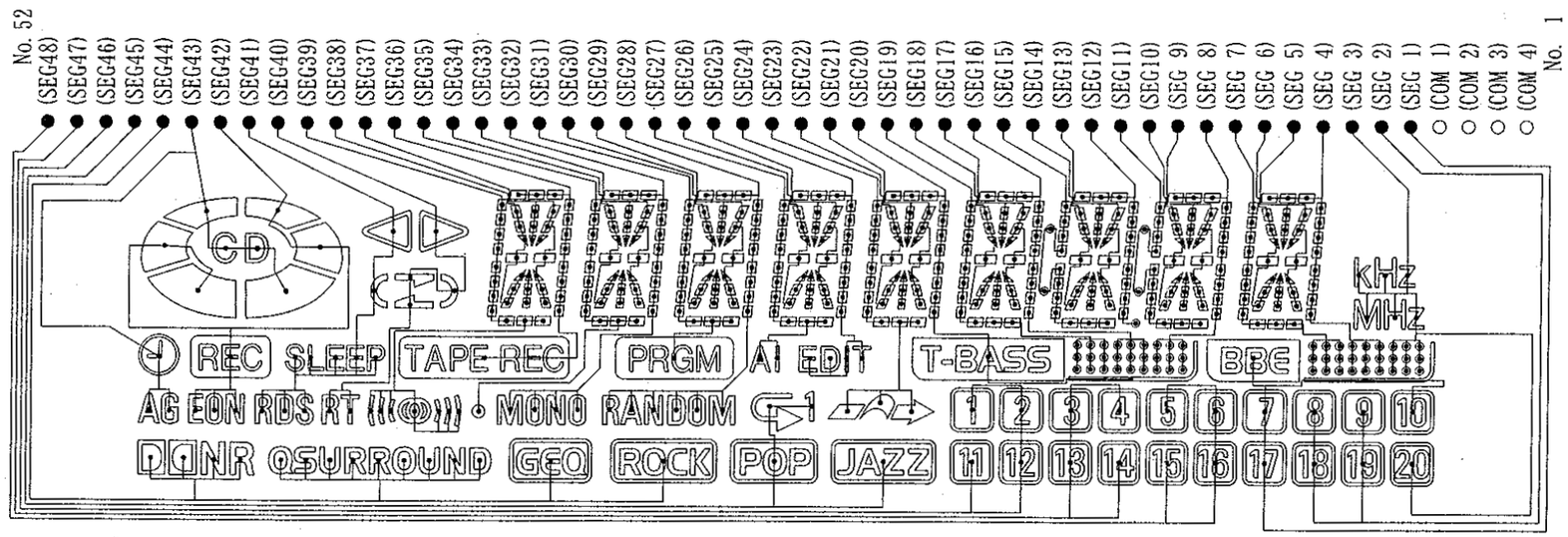

<COMMON>

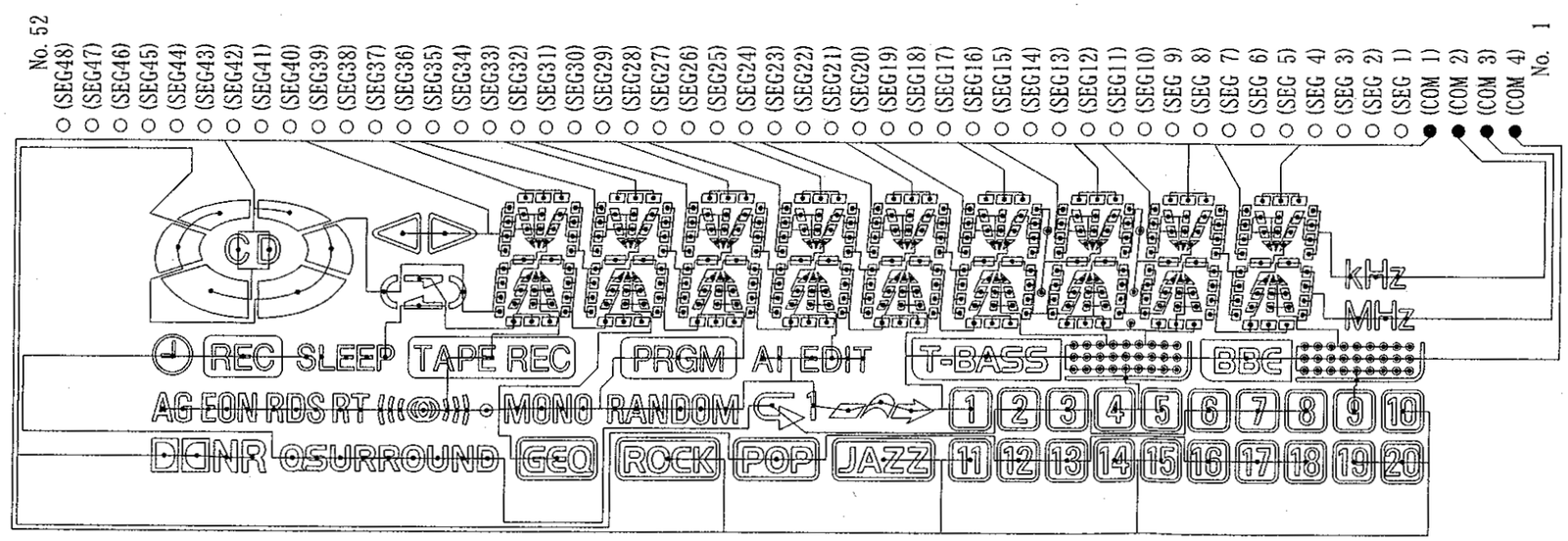

IC DESCRIPTION

IC, LC78622NE

Pin No.	Pin Name	I/O	Description
1	DEFI	I	Defect detection signal (DEF) input. ("L" is applied when not used.)
2	TAI	I	For PLL/Test input. (Connected to 0V)
3	PDO	O	Phase comparison output to control the external VCO.
4	VVSS	–	Ground of the built-in VCO. Normally 0V.
5	ISET	I	For the connection of a resistor which adjusts the PDO output current.
6	VVDD	–	Power supply of the built-in VCO.
7	FR	I	Adjusts the VCO frequency range.
8	VSS	–	Ground of digital circuits. Normally 0V.
9	EFMO	O	For slice level control/EFM signal output.
10	EFMIN	I	EFM signal input.
11	T2	I	Test input. A pull-down resistor is incorporated. (Connected to 0V)
12	CLV+	O	Disc motor control tri-state output.
13	CLV-		
14	V/$\overline{P}$	O	Output to monitor the automatic switching between the rough servo control and phase servo control. "H" : Rough servo, "L": Phase servo.
15	HFL	I	Track detection signal input. Schmitt trigger input.
16	TES	I	Track error signal input. Schmitt trigger input.
17	TOFF	O	Tracking off output.
18	TGL	O	Tracking gain switching output. "L" raises the gain.
19	JP+	O	Track jump control tri-state output.
20	JP-		
21	PCK	O	Monitors the clock signal for EFM data playback. 4.3218MHz when the phase is locked. (Not used)
22	FSEQ	O	Sync signal detection output. Goes "H" when the sync signal detected from the EFM signal matches the sync signal generated internally. (Not used)
23	VDD	–	Power supply of digital circuits.
24	SL+	O	Controlled by serial data command issued by the microprocessor.
25	SL–	O	Controlled by serial data command issued by the microprocessor.
26	NC	–	Not connected.
27	PU IN	I	CD pickup inside limit switch.
28	CD R/W	O	CD-RW disc select control.
29	EMPH	O	Deemphasis monitor. "H": when playing a deemphasis disc. (Not used)
30	C2F	O	C2 flag output. (Not used)
31	DOUT	O	Output a digital OUT signal. (EIAJ format) (Not used)
32	T3	I	Test input. (Connected to 0V)
33	T4		
34	NC	–	Not connected.
35	MUTEL	O	Lch 1-bit DAC/Lch muting output. (Not used)
36	LVDD	–	Lch power supply.
37	LCHO	O	Lch output.
38	LVSS	–	Lch ground. Normally 0V.

Pin No.	Pin Name	I/O	Description
39	RVSS	–	Rch 1-bit DAC/Rch ground. Normally 0V.
40	RCHO	O	Rch output.
41	RVDD	–	Rch power supply.
42	MUTER	O	Rch muting output. (Not used)
43	XVDD	–	Power supply of crystal oscillator.
44	XOUT	O	For the connection of a 16.93MHz crystal oscillator.
45	XIN	I	
46	XVSS	–	Ground of crystal oscillator. Normally 0V.
47	SBSY	O	Subcode block sync signal output. (Not used)
48	EFLG	O	C1, C2, single, duplex correction monitor. (Not used)
49	PW	O	Output of subcodes P, Q, R, S, T, U and W. (Not used)
50	SFSY	O	Subcode frame sync signal output. Falls when the subcode is set to the standby state. (No used)
51	SBCK	I	Subcode read-out clock input. Schmitt trigger input. ("L" is applied when not used.) (Connected to 0V)
52	FSX	O	7.35kHz sync signal output obtained by dividing the oscillator frequency. (Not used)
53	WRQ	O	Subcode Q standby output.
54	RWC	I	Read/write control input. Schmitt trigger input.
55	SQOUT	O	Subcode Q output.
56	COIN	I	Command input from the microprocessor.
57	$\overline{\text{CQCK}}$	I	Command input retrieval clock or subcode retrieval clock input from SQOUT. Schmitt trigger input.
58	$\overline{\text{RES}}$	I	LC78622NE reset input.
59	T11	O	Test output. Set to open (normally "L" output.) (Not used)
60	16M	O	16.9344MHz output. (Not used)
61	4.2M	O	4.236MHz output.
62	T5	I	Test input. A pull-down resistor is incorporated. (Connected to 0V)
63	$\overline{\text{CS}}$	I	Chip select input. (Connected to 0V)
64	T1	I	Test input with no pull-down resistor. (Connected to 0V)

IC, LA9241ML

Pin No.	Pin Name	I/O	Description
1	FIN2	I	For the connection of the pickup photodiode. Addition to the FIN1 pin creates an RF signal and subtraction from it create an EF signal.
2	FIN1	I	For the connection of the pickup photodiode.
3	E	I	For the connection of the pickup photodiode. Subtraction from the F pin creates a TE signal.
4	F	I	For the connection of the pickup photodiode.
5	TB	I	Inputs the DC components in the TE signal.
6	TE–	I	For the connection of a resistor which sets the gain of the TE signal between this pin and the TE pin.
7	TE	O	TE signal output.
8	TESI	I	TES (track error sense) comparator input. The TE signal is passed through a BPF.
9	SCI	I	Shock detection input.
10	TH	I	Sets the time constant for the tracking gain.
11	TA	O	TA amp output.
12	TD–	I	Composes the tracking phase compensation constant between the TD and VR pins.
13	TD	O	Sets the tracking phase compensation.
14	JP	I	Sets the amplitude of the tracking jump signal (kick pulses).
15	TO	O	Tracking control signal output.
16	FD	O	Focusing control signal output.
17	FD–	I	Composes the focusing phase compensation constant between the FD and FA pins.
18	FA	O	Composes the focusing phase compensation constant between the FD- and FA- pins.
19	FA–	I	Composes the focusing phase compensation constant between the FA and FE pins.
20	FE	O	FE signal output.
21	FE–	I	For the connection of a resistor whichs sets the gain of the FE signal between this pin and the TE pin.
22	A-GND	–	Ground of analog signals.
23	SP	O	Single-ended output of the signals input to the CV+ and CV- pins.
24	SPI	I	Spindle amp input.
25	SPG	I	For the connection of a resistor which sets the gain in the spindle 12cm mode. (Not used)
26	SP–	I	For the connection of the spindle phase compensation constant with the SPD pin.
27	SPD	O	Spindle control signal output.
28	SLEQ	I	For the connection of sled phase compensation constant.
29	SLD	O	Sled control signal output.
30	SL–	I	Sled feed signal input from the microprocessor.
31	SL+		
32	JP–	I	Tracking signal input from the DSP.
33	JP+		
34	TGL	I	Tracking gain control signal input from the DSP. Low gain when TGL is "H".
35	TOFF	I	Tracking off control signal input from the DSP. Off when TOFF is "H".
36	TES	O	Outputs the TES signal to the DSP.

Pin No.	Pin Name	I/O	Description
37	HFL	O	The HFL (high frequency level) signal is used to judge whether the main beam is positioned on the pit or on the mirror.
38	SLOF	I	Sled servo off control input.
39	CV–	I	CLV error signal input from the DSP.
40	CV+		
41	RFSM	O	RF output.
42	RFS–	O	Sets the RF gain and the EFM signal's 3T compensation constant together with the RFSM pin.
43	SLC	O	The SLC (slice level control) signal is output to control the DSP's data slice level of the RF waveform.
44	SLI	I	Input to control the DSP's data slice level.
45	D-GND	–	Ground of digital signals.
46	FSC	O	Output for the focus search smoothing capacitor.
47	TBC	I	The TBC (tracking balance control) signal sets the EF balance variation range.
48	NC	–	Not connected.
49	DEF	O	Disc defect detection output.
50	CLK	I	Reference clock input. 4.23MHz is input from the DSP.
51	CL	I	Microprocessor command clock input.
52	DAT	I	Microprocessor command data input.
53	CE	I	Microprocessor chip enable input.
54	DRF	O	DRF (detect RF) is an output to detect the RF level.
55	FSS	I	The FSS (focus search select) signal switches the focus search modes (+/-search / +search with respect to the reference voltage). (Not used)
56	VCC2	–	VCC of servo and digital circuits.
57	REFI	–	For the connection of bypass capacitor for the reference voltage.
58	VR	O	Reference voltage output.
59	LF2	–	Sets the time constant for disc defect detection.
60	PH1	–	For the connection of a capacitor to hold the RF signal peak.
61	BH1	–	For the connection of a capacitor to hold the RF signal bottom.
62	LDD	O	APC circuit output.
63	LDS	I	APC circuit input.
64	VCC1	–	VCC of RF signal circuits.

IC, LC876564V-5V69

Pin No.	Pin Name	I/O	Description
1	O-CD CLK	O	CD IC control clock output.
2	O-CD CE	O	CD IC control chip enable output.
3	I-CD WRQ	I	Input standby for CD subcode Q output.
4	I-CD DRF	I	Detect CD RF level.
5	I-CD SUBQ	I	CD IC data input.
6	O-CD ON	O	CD ON / $\overline{\text{OFF}}$ control output.
7	O-MUTE	O	Audio mute ON / $\overline{\text{OFF}}$ control output.
8	O-POWER	O	System power supply $\overline{\text{ON}}$/ OFF output.
9	O-TUNE ON	O	Tuner ON / $\overline{\text{OFF}}$ control output.
10	O-$\overline{\text{CLK SHIFT}}$	O	MICON clock shift output.
11	$\overline{\text{RESET}}$	I	Reset input.
12	I-$\overline{\text{HOLD}}$	I	Power failure detection input.
13	I-LEVEL (NC)	I	Signal level input. (Not used)
14	VSS1	-	GND.
15	CF1	-	9.43MHz oscillator circuit.
16	CF2	-	9.43MHz oscillator circuit.
17	VDD1	-	Power supply input.
18	O-AMP ON	O	AMP ON / OFF control output. (Not used)
19	O-PLL CE	O	PLL IC chip enable output.
20	I-$\overline{\text{TUNE}}$/IFC	I	IF count serial data input.
21	I-$\overline{\text{STEREO}}$	I	Tuner stereo detect input.
22	I-RDS DATA	I	RDS data input. <EZ only>
23	I-TUNER	I	Tuner select input. (A /D)
24	I-KEY1	I	Key input. (A /D)
25	I-KEY2	I	Key input. (A /D)
26	I-RDS CLK	I	RDS clock input. <EZ only>
27	I-TU SIG	I	Tuner $\overline{\text{SD}}$ detect input. <EZ only>
28	I-TM BASE	I	Reference clock input for watch.
29	I-$\overline{\text{REMOCON}}$	I	System remote control signal input.
30 ~ 45	NC	-	Not connected.
46	VDD3	-	Power supply input.
47 ~ 50	NC	-	Not connected.
51	VP	-	GND.
52 ~ 71	NC	-	Not connected.
72	VDD4	-	Power supply input.
73 ~ 76	NC	-	Not connected.
77	O-BLU LED	O	Blue LED control output.
78	O-RED LED	O	Red LED control output.
79	O-GRN LED	O	Green LED control output.
80	NC	-	Not connected.
81	OSC	-	OSC test point.
82 ~ 84	NC	-	Not connected.

Pin No.	Pin Name	I/O	Description
85	O-DATA	O	PLL, function IC control data output.
86	O-CLK	O	PLL, function IC control clock output.
87	O-FUNC CE	O	Function IC control chip enable output.
88	O-$\overline{\text{STANDBY}}$	O	Standby LED $\overline{\text{ON}}$ / OFF control output.
89	VSS2	-	GND.
90	VDD2	-	Power supply input.
91	I-JOG1	I	Jog signal input.
92	I-JOG2	I	Jog signal input.
93	I-CD OPEN	I	CD open switch signal input.
94	I-CD CLOSE	I	CD close switch signal input.
95	O-CD OPEN	O	CD cover open signal output.
96	O-CD CLOSE	O	CD cover close signal output.
97	O-CD DATA	O	CD IC control data output.
98	O-LCD DATA	O	LCD control data output.
99	O-LCD CE	O	LCD control chip enable output.
100	O-LCD CLK	O	LCD control clock output.

ADJUSTMENT <TUNER / CD / AMP – MICON>

< TUNER SECTION > <U, C>

1. Clock Frequency Check
   Settings : • Test point : TP2(CLK)
   Method : Set to AM 1710kHz and check that the test point is 2160kHz ± 45Hz.

2. AM VT Check
   Settings : • Test point : TP1(VT)
   Method : Set to AM 1710kHz and check that the test point is less than 8.5V. Then set to AM 530kHz and check that the test point is more than 0.6V.

3. AM Tracking Adjustment
   Settings : • Test point : TP8(Lch), TP9(Rch)
   • Adjustment location : L981(1/3)
   Method : Set to AM 1000kHz and adjust L981(1/3) so that the test point becomes maximum.

4. AM IF Adjustment
   Settings : • Test point : TP8(Lch), TP9(Rch)
   • Adjustment location :
   L772 ..... 450kHz.

5. FM VT Check
   Settings : • Test point : TP1(VT)
   Method : Set to FM 108.0MHz and check that the test point is less than 8.0V. Then set to FM 87.5MHz and check that the test point is more than 0.5V.

6. FM Tracking Check
   Settings : • Test point : TP8(Lch), TP9(Rch)
   Method : Set to FM 98.0MHz and check that the test point is less than 9dBμV.

7. DC Balance / Mono Distortion Adjustment
   Settings : • Test point : TP3, TP4 (DC Balance)
   TP8(Lch), TP9(Rch) (Distortion)
   • Adjustment location : L771
   • Input level : 60dBμV
   Method : Set to FM 98.0MHz and adjust L771 so that the voltage between TP3 and TP4 becomes 0V ± 0.04V. Then check that the distortion is less than 1.3%.

8. Output Level Check
   <AM>
   Settings : • Test point : TP8(Lch), TP9(Rch)
   • Input level : 74dBμV
   Method : Set to AM 1000kHz and check that the test point is 175mV ± 3dB.

   <FM>
   Settings : • Test point : TP8(Lch), TP9(Rch)
   • Input level : 60dBμV
   Method : Set to FM 98.0MHz and check that the test point is 700mV ± 3dB.

9. FM Seperation Check
   Settings : • Test point : TP8(Lch), TP9(Rch)
   • Input level : 60dBμV
   Method : Set to FM 98.0MHz and check that the test point is more than 25dB.

< TUNER SECTION > <EZ, K>

1. Clock Frequency Check
   Settings : • Test point : TP2(CLK)
   Method : Set to MW 1602kHz and check that the test point is 2052kHz ± 45Hz.

2. MW VT Check
   Settings : • Test point : TP1(VT)
   Method : Set to MW 1602kHz and check that the test point is less than 8.0V. Then set to MW 531kHz and check that the test point is more than 0.6V.

3. MW Tracking Adjustment
   Settings : • Test point : TP8(Lch), TP9(Rch)
   • Adjustment location : L981(1/3)
   Method : Set to MW 999kHz and adjust L981(1/3) so that the test point becomes maximum.

4. LW VT Adjustment
   Settings : • Test point : TP1(VT)
   • Adjustment location : L942
   Method : Set to LW 144kHz and adjust L942 so that the test point becomes 1.3V ± 0.05V. Then set to LW 290kHz and check that the test point is less than 8.0V.

5. LW Tracking Adjustment
   Settings : • Test point : TP8(Lch), TP9(Rch)
   • Adjustment location :
   L941 ..... 144kHz.
   TC942 ..... 290kHz.
   Method : Set up TC942 to center before adjustment.
   Adjust L941 so that the level at 144kHz becomes maximum. Then adjust TC942 so that the level at 290kHz becomes maximum.

6. AM IF Adjustment
   Settings : • Test point : TP8(Lch), TP9(Rch)
   • Adjustment location :
   L772 ..... 450kHz.

7. FM VT Check
   Settings : • Test point : TP1(VT)
   Method : Set to FM 108.0MHz and check that the test point is less than 8.0V. Then set to FM 87.5MHz and check that the test point is more than 0.5V.

8. FM Tracking Check
   Settings : • Test point : TP8(Lch), TP9(Rch)
   Method : Set to FM 98.0MHz and check that the test point is less than 9dBµV.

9. DC Balance / Mono Distortion Adjustment
   Settings : • Test point : TP3, TP4 (DC Balance)
   TP8(Lch), TP9(Rch) (Distortion)
   • Adjustment location : L771
   • Input level : 60dBµV
   Method : Set to FM 98.0MHz and adjust L771 so that the voltage between TP3 and TP4 becomes 0V ± 0.04V. Then check that the distortion is less than 1.3%.

10. Output Level Check
    <AM>
    Settings : • Test point : TP8(Lch), TP9(Rch)
    • Input level : 74dBµV
    Method : Set to AM 1000kHz and check that the test point is 175mV ± 3dB.

    <FM>
    Settings : • Test point : TP8(Lch), TP9(Rch)
    • Input level : 60dBµV
    Method : Set to FM 98.0MHz and check that the test point is 700mV ± 3dB.

11. FM Seperation Check
    Settings : • Test point : TP8(Lch), TP9(Rch)
    • Input level : 60dBµV
    Method : Set to FM 98.0MHz and check that the test point is more than 25dB.

< TUNER SECTION > <HR>

1. Clock Frequency Check
   Settings : • Test point : TP2(CLK)
   Method : Set to AM 1602kHz and check that the test point is 2052kHz ± 45Hz.

2. AM VT Check
   Settings : • Test point : TP1(VT)
   Method : Set to AM 1602kHz and check that the test point is less than 8.0V. Then set to AM 531kHz and check that the test point is more than 0.6V.

3. AM Tracking Adjustment
   Settings : • Test point : TP8(Lch), TP9(Rch)
   • Adjustment location : L981(1/3)
   Method : Set to AM 999kHz and adjust L981(1/3) so that the test point becomes maximum.

4. AM IF Adjustment
   Settings : • Test point : TP8(Lch), TP9(Rch)
   • Adjustment location :
   L772 ..... 450kHz.

5. FM VT Check
   Settings : • Test point : TP1(VT)
   Method : Set to FM 108.0MHz and check that the test point is less than 8.0V. Then set to FM 87.5MHz and check that the test point is more than 0.5V.

6. FM Tracking Check
   Settings : • Test point : TP8(Lch), TP9(Rch)
   Method : Set to FM 98.0MHz and check that the test point is less than 9dBµV.

7. DC Balance / Mono Distortion Adjustment
   Settings : • Test point : TP3, TP4 (DC Balance)
   TP8(Lch), TP9(Rch) (Distortion)
   • Adjustment location : L771
   • Input level : 60dBµV
   Method : Set to FM 98.0MHz and adjust L771 so that the voltage between TP3 and TP4 becomes 0V ± 0.04V. Then check that the distortion is less than 1.3%.

8. Output Level Check
   <AM>
   Settings : • Test point : TP8(Lch), TP9(Rch)
   • Input level : 74dBµV
   Method : Set to AM 1000kHz and check that the test point is 175mV ± 3dB.

   <FM>
   Settings : • Test point : TP8(Lch), TP9(Rch)
   • Input level : 60dBµV
   Method : Set to FM 98.0MHz and check that the test point is 700mV ± 3dB.

9. FM Seperation Check
   Settings : • Test point : TP8(Lch), TP9(Rch)
   • Input level : 60dBµV
   Method : Set to FM 98.0MHz and check that the test point is more than 25dB.

< CD SECTION >

CD PWB

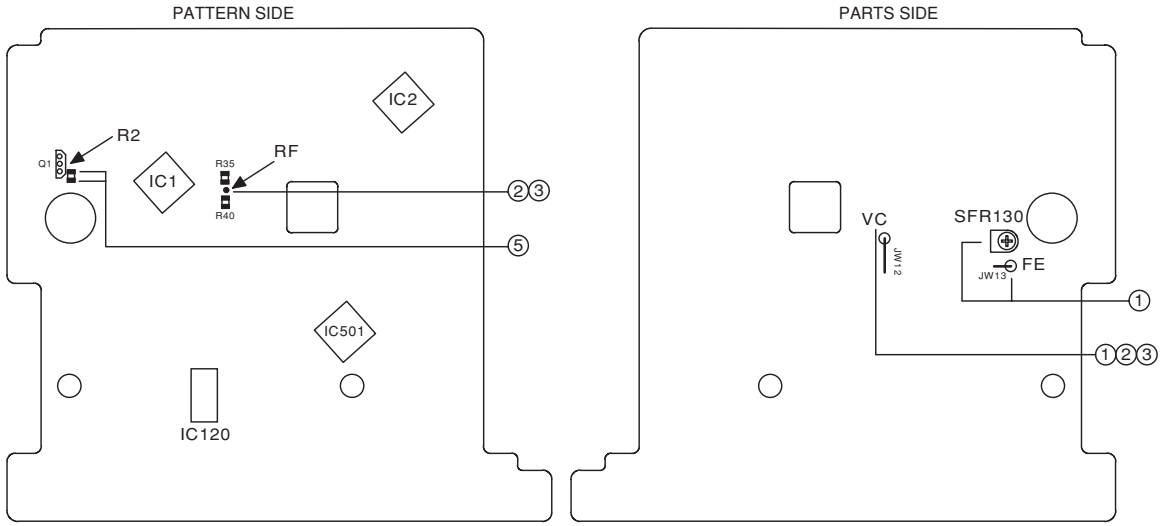

CD Adjustment Method

- Perform the adjustments after the machine enters the test mode.
- Place the CD mechanism on level ground.
- Equipment and tools required

Measuring equipment: Oscilloscope (Use the probe of 10:1)
Digital Multimeter (Use it in the DC Volt range)
Jitter meter (Kikusui 6235)

Test Disc: TCD-782
ATD-001

1. Focus Bias Adjustment
   1) Connect a digital multimeter to the test point (FE), (VC).
   2) Play back the 2nd track of TCD-782.
   3) Adjust SFR130 until the digital multimeter indicates 0 ± 10 mV.

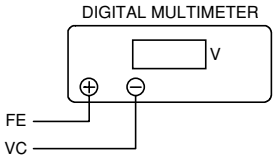

2. RF Waveform Check
   1) Connect an oscilloscope to test point (RF), (VC).
   2) Play back the 2nd track of TCD-782.
   3) Check that the RF waveform has the maximum amplitude and the center of the wedge waveform has the clear blank.

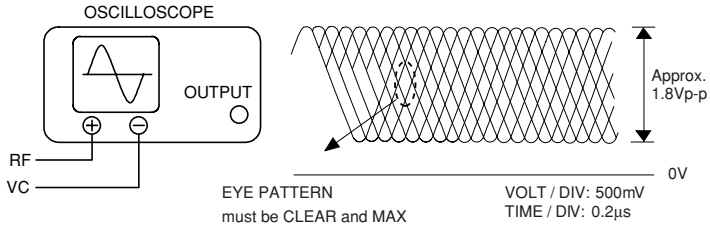

3. Jitter Check
   1) While an oscilloscope is kept connected in the same test point as in step 2. RF Waveform Check, connect the output terminal of an oscilloscope to the input terminal of the jitter meter.
   2) Set the VOLT range selector of an oscilloscope to 500 mV range or lower.
   3) Play back the 2nd track of TCD-782.
   4) Check that the jitter meter indicates 28.0 ns or less.

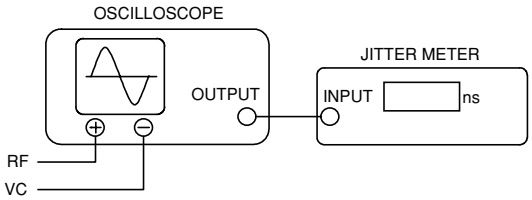

4. Play Ability Check
   1) Play back the 3rd, 8th, and 13th track of ATD-001. Check that the noise does not occur and sound skipping does not occur.

5. Laser Current Check
   * Do not perform this measurement unless the laser is suspected to be defective.
   1) Connect a digital multimeter across the resistor R2 (10 Ω).
   2) Play back the TCD-782 and check the DC voltage value on the digital multimeter.
   3) Calculate the laser current (Iop) by dividing the DC voltage across R2 by the resistor value (R2 = 10 Ω). Check that the laser current (Iop) is 80 mA or less.

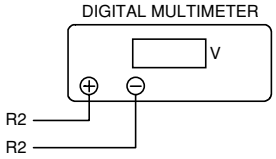

< AMP – MICON SECTION >

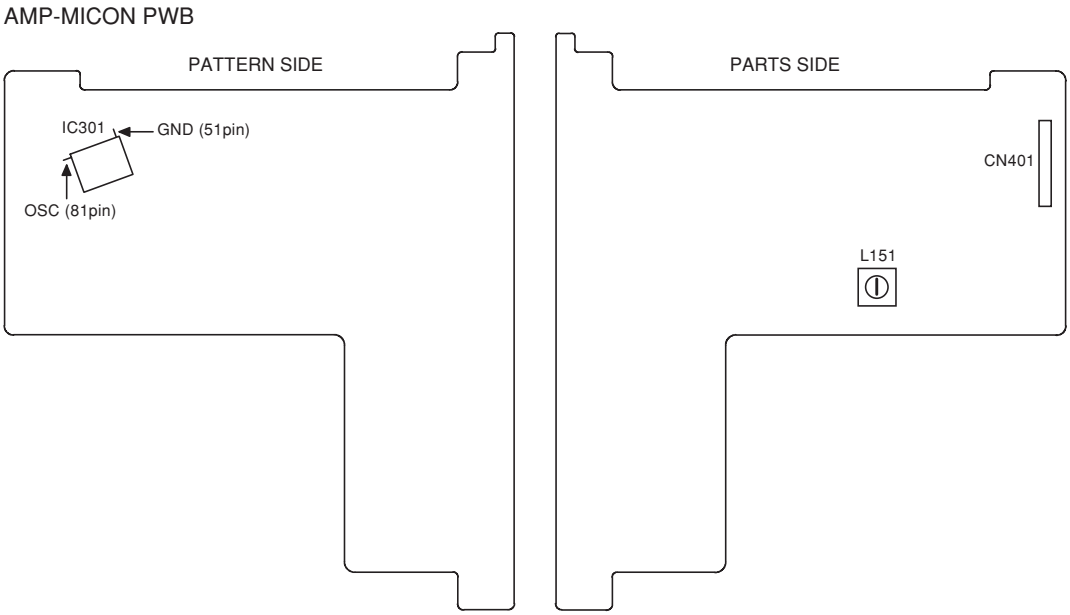

1. Clock Adjustment
   1) Connect an oscilloscope to test point OSC (IC301 81 pin) and GND (IC301 51 pin).
   2) Insert the AC plug while pressing POWER and TUNER / BAND buttons.
   3) Adjust L151 until the oscilloscope indicates 97.250 ± 0.050Hz (10.278 ~ 10.288ms)

CD TEST MODE

1. How to Start the CD Test Mode

While pressing the CD FUNCTION button, insert the AC plug to the power outlet.
When the test mode started, all lights on the display are lit.

2. How to Exit the CD Test Mode

Press the POWER button or press the other FUNCTION buttons or disconnect the AC plug.

3. Function and Usage of the CD Test Mode

No	Mode	Button for Activation	Display	Operation	Contents
1	Start Mode		All lights are lit.		• FL check • Microcomputer check
2	Search Mode (without disc)	PLAY button	Normal	• LD illuminates all the time • Focus search continues operations *1 • Spindle motor continuous kick	• APC circuit check • Laser current measurement • Focus search waveform check • Focus error waveform check (DRF in the search mode is ignored)
3	Play Mode	PLAY button	Normal	• Normal playback • If TOC cannot be read, focus search is continued	• Each servo circuit is checked • DRF check
4	Sled Mode	FF button		• Pickup moves to the inner circumference *2	• Sled circuit check • Mechanism operation check • Pickup check
		RWD button		• Pickup is moves to the outer circumference *2	

* 1. The driver IC heats up and the protection circuit starts working when the focus search is continued for 10 minutes or longer. There can be a case that operations cannot be performed correctly. In such a case, turn off the main power. After cooling down the machine, restart the machine.

* 2. Be careful not to damage the gear because the sled motor rotates while the FF or RWD button is being pressed even if the pickup is located in the innermost track or the outermost track.

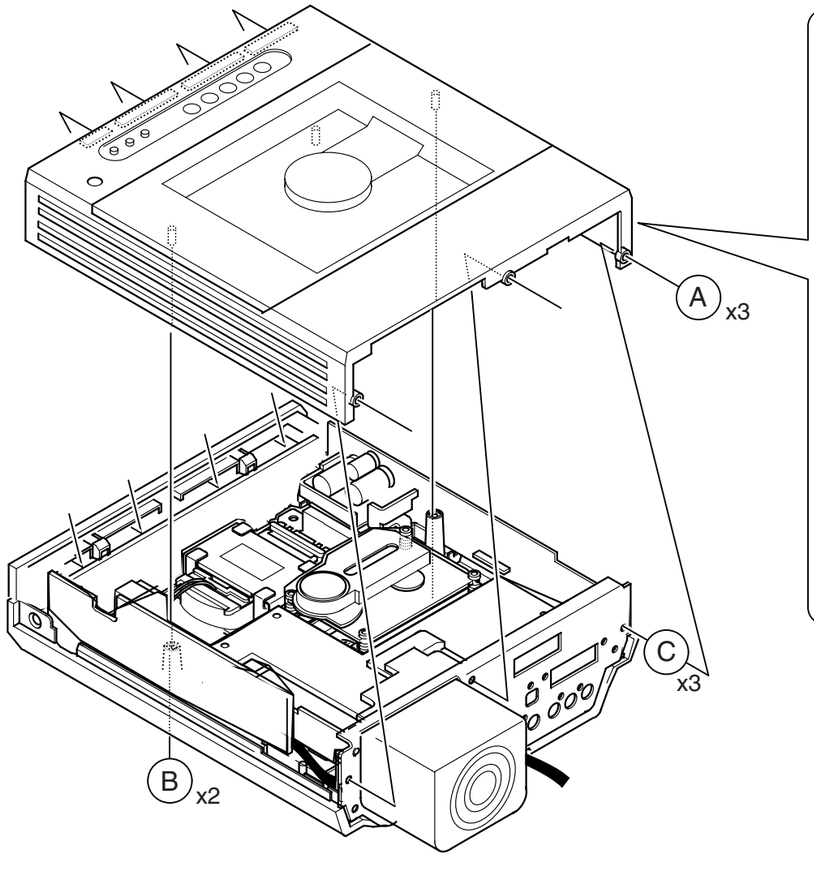
A x3
B x2
C x3

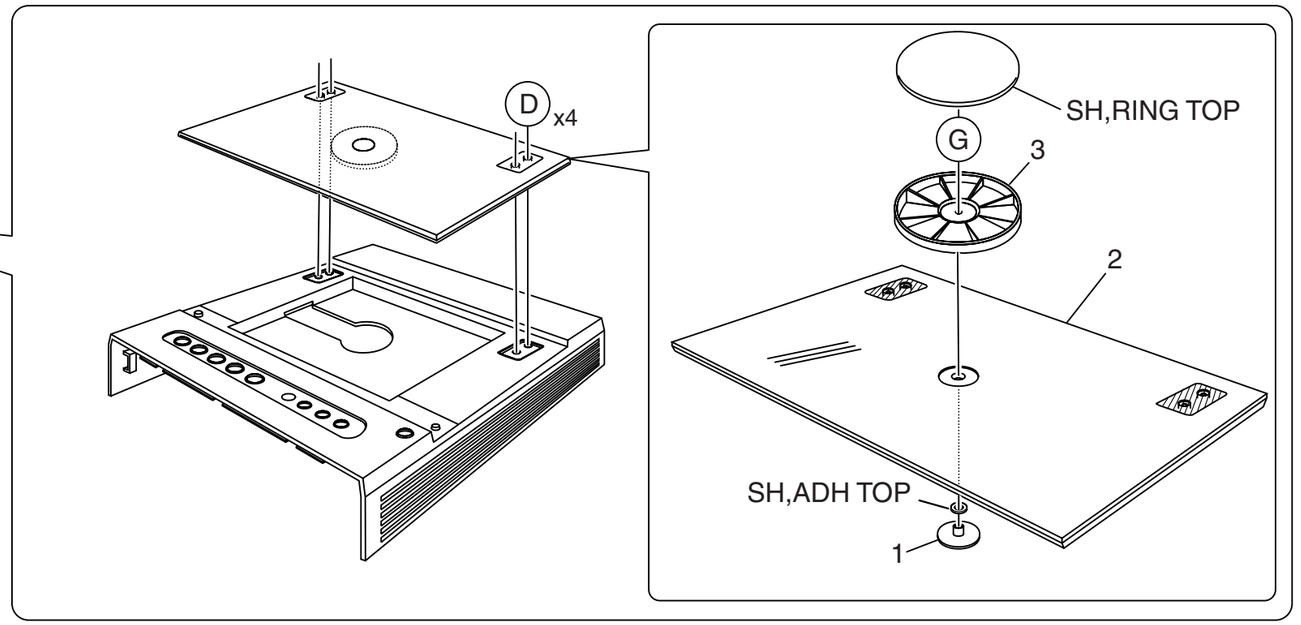
D x4
SH,RING TOP
G
3
2
SH,ADH TOP
1

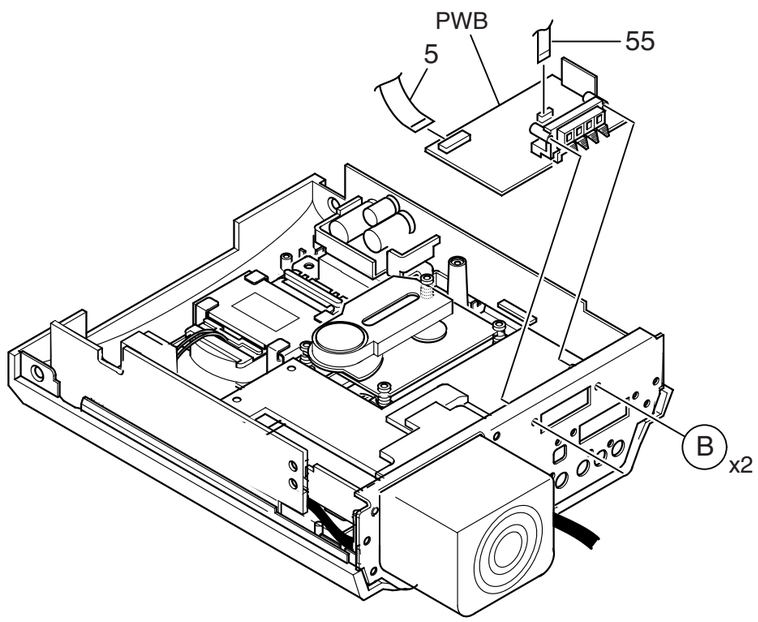
PWB
5
55
B x2

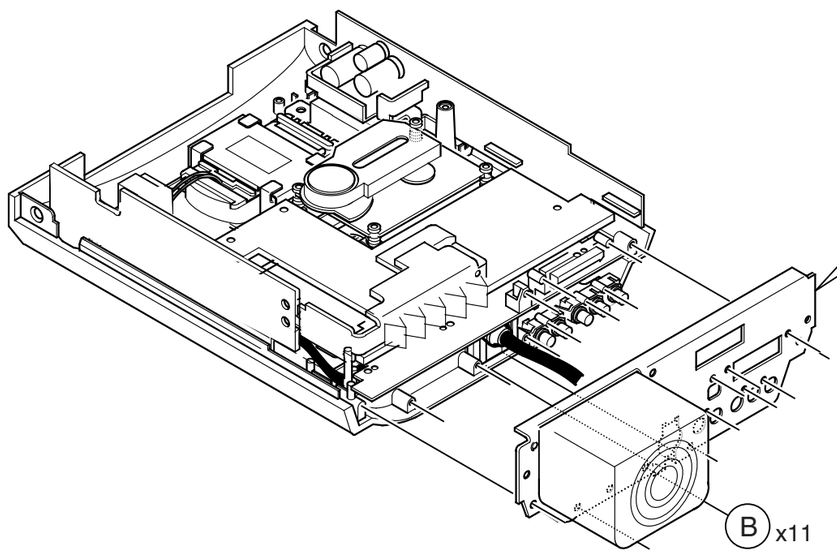
B x11

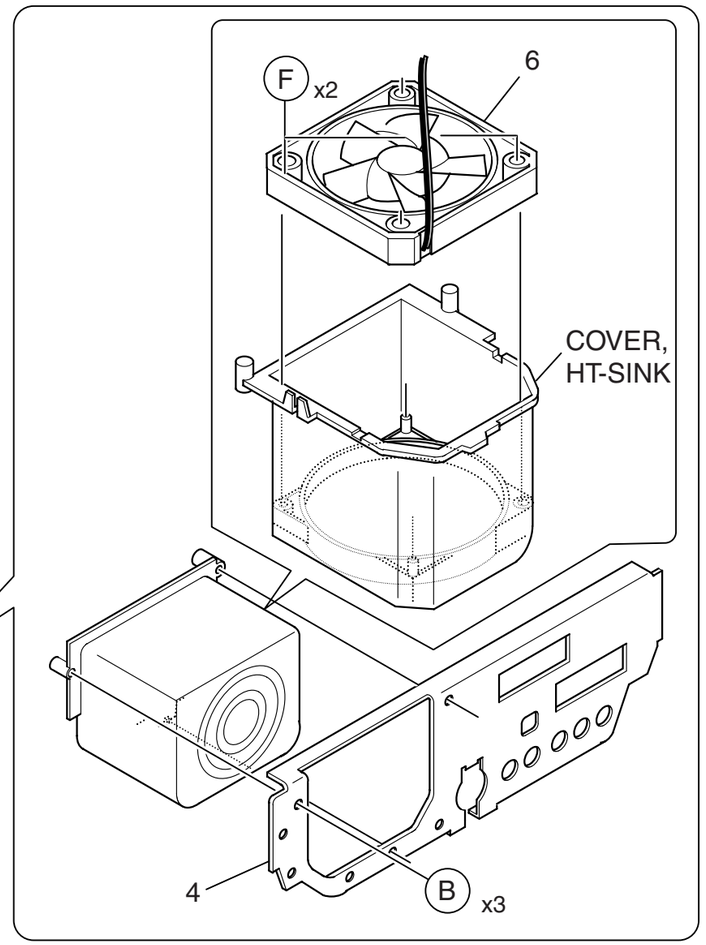
F x2
6
COVER,
HT-SINK
4
B x3

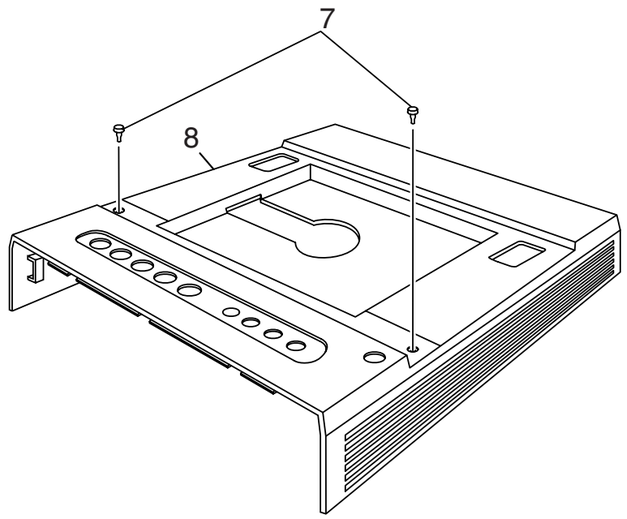
7
8

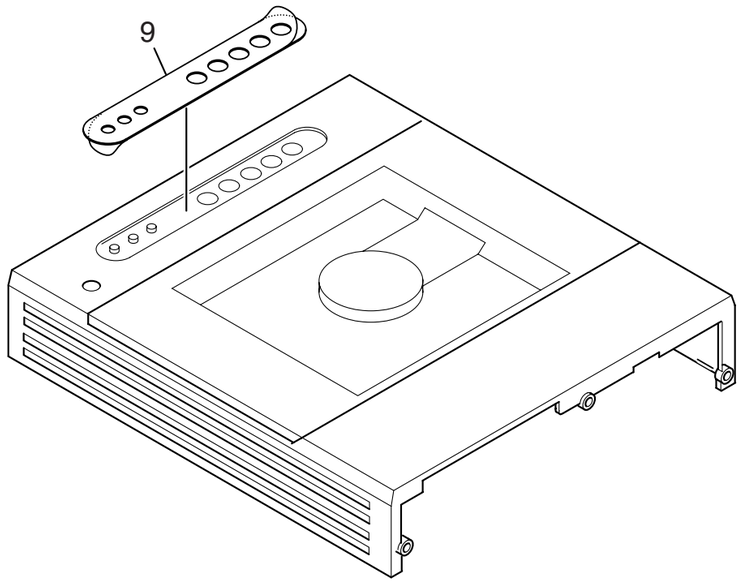
9

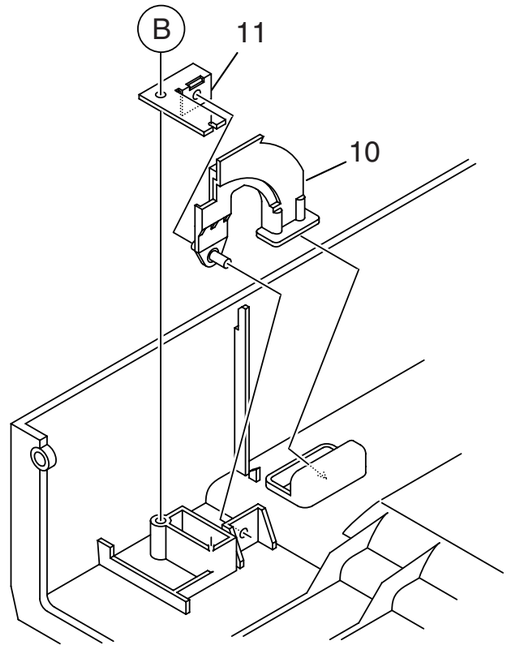
B
11
10

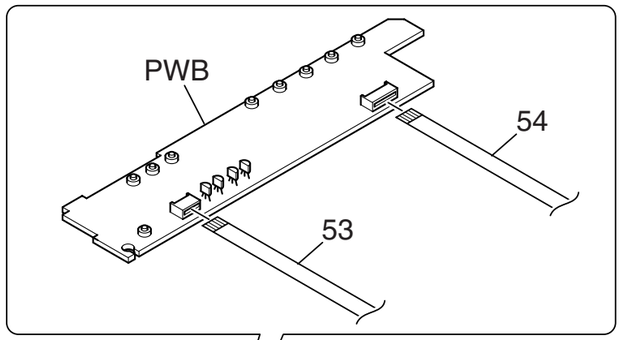
PWB
54
53

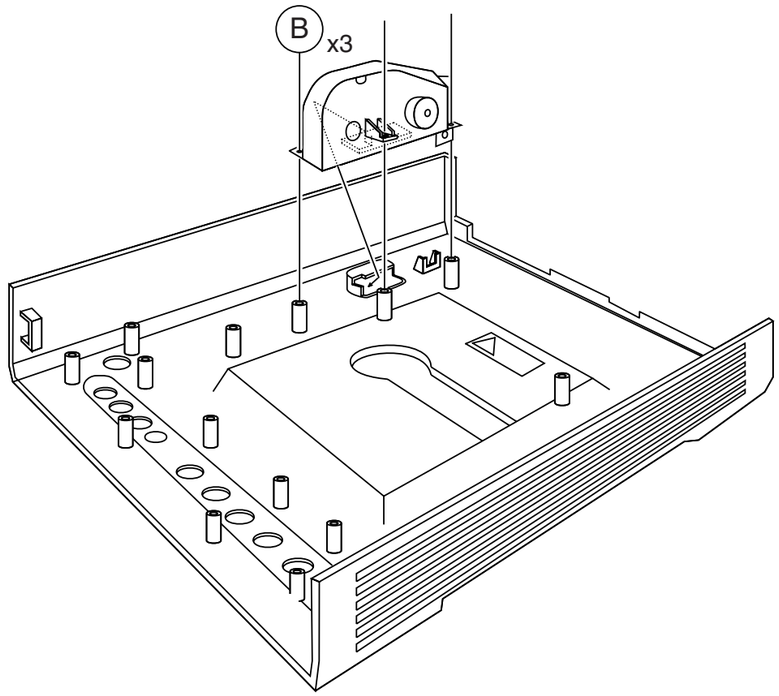
B x3

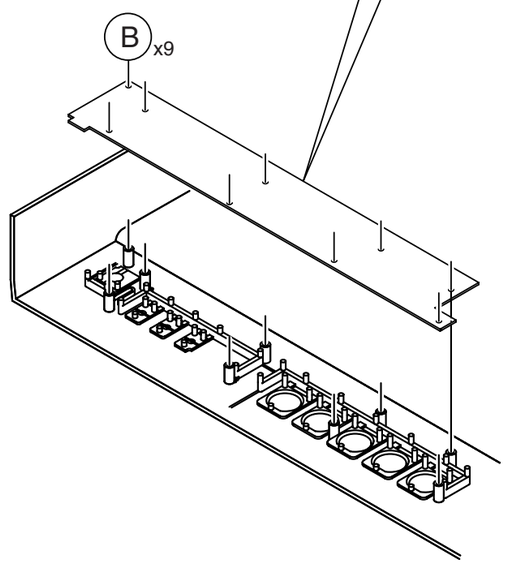
B x9

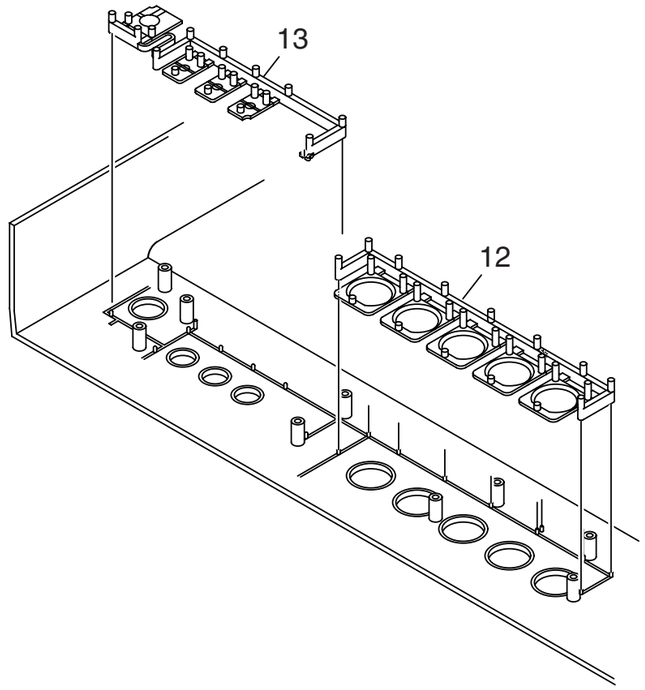
13
12

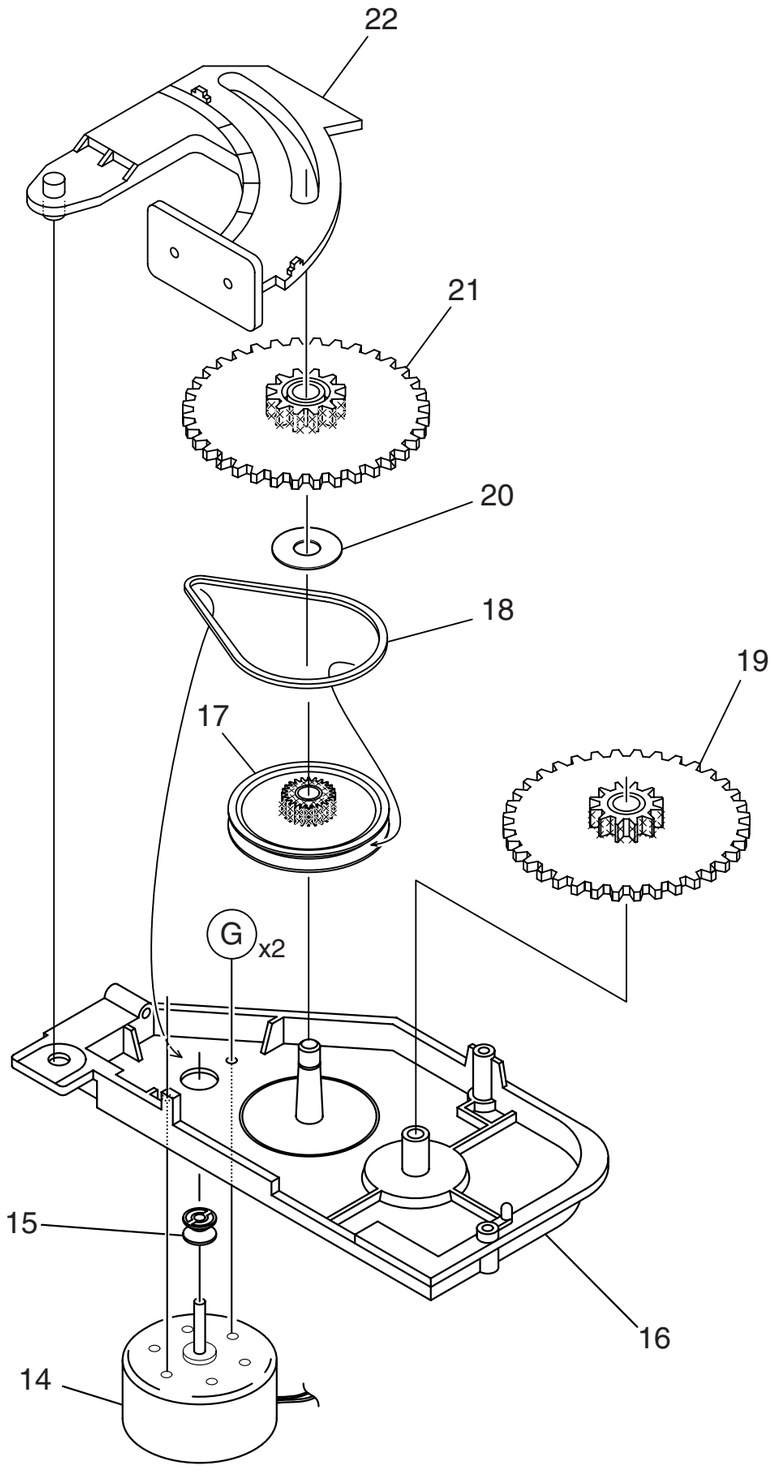
22
21
20
18
19
17
G x2
15
16
14

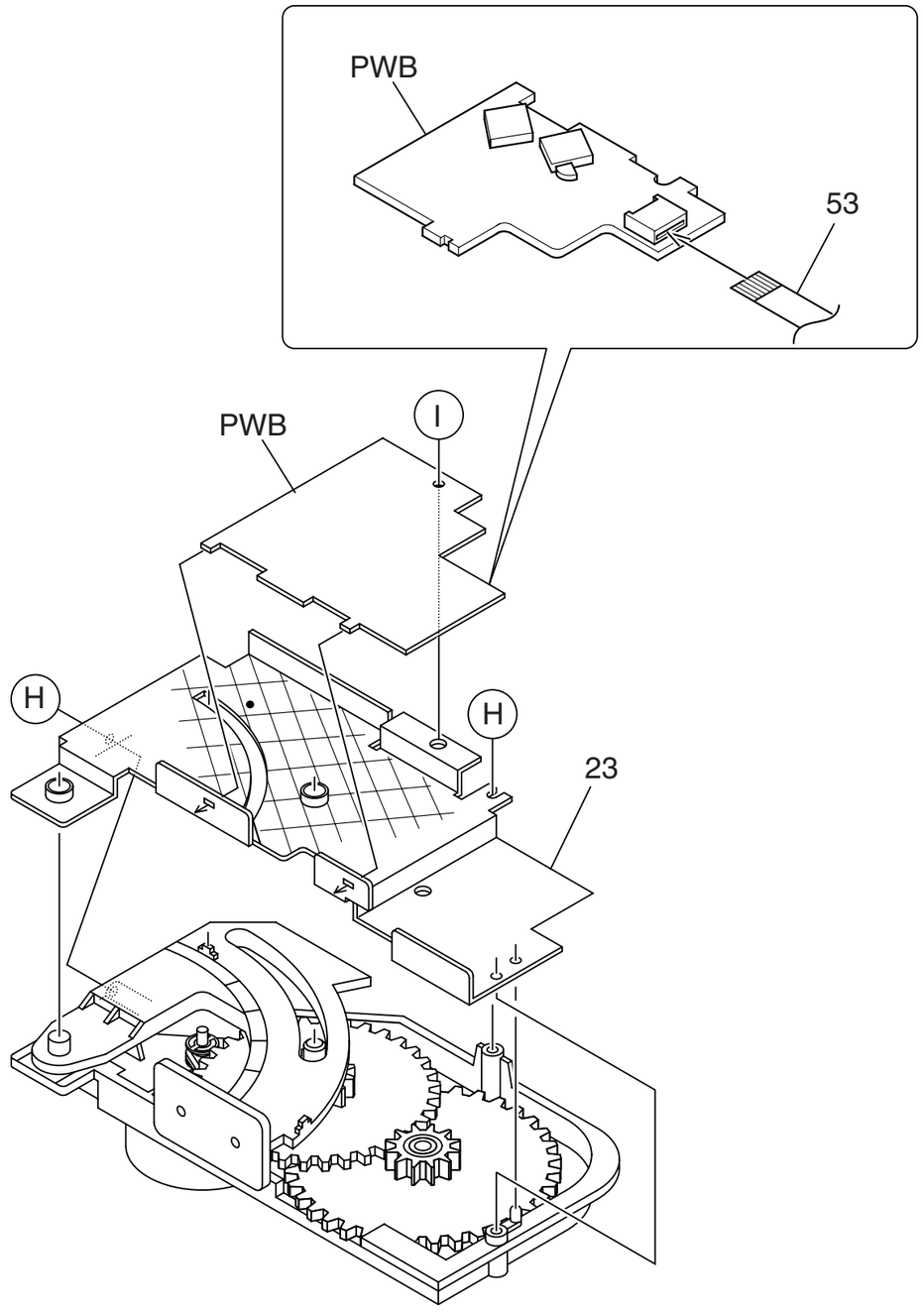
PWB
53
PWB
I
H
H
23

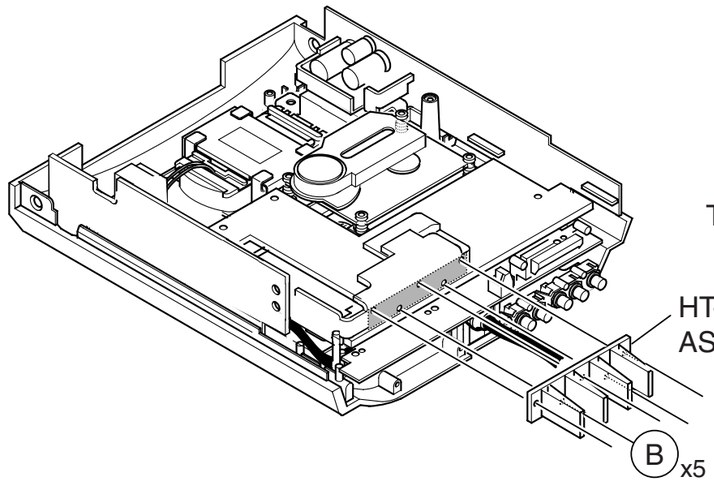
HT-SINK,
ASSY MAIN
B
x5

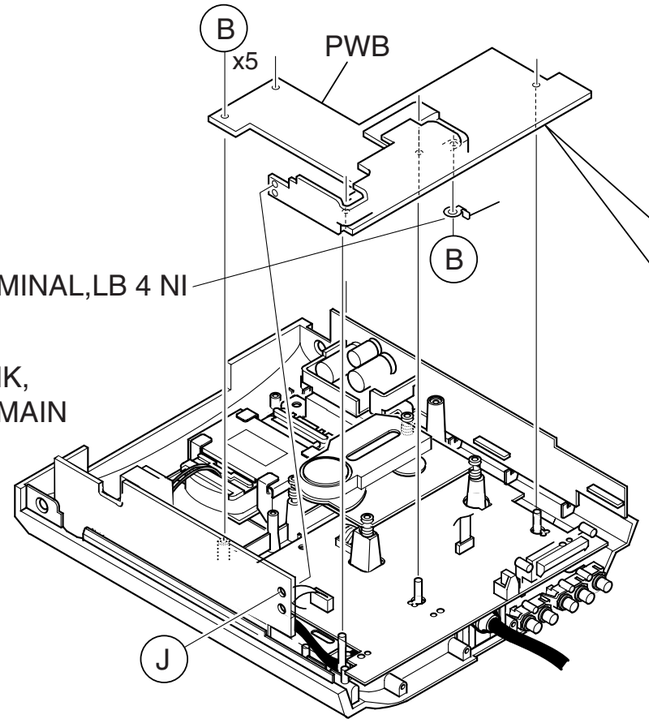
B
x5
PWB
TERMINAL,LB 4 NI
B
J

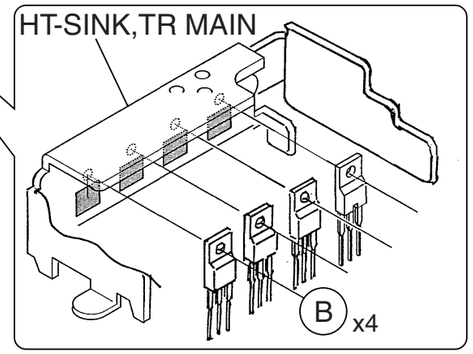
HT-SINK,TR MAIN
B
x4

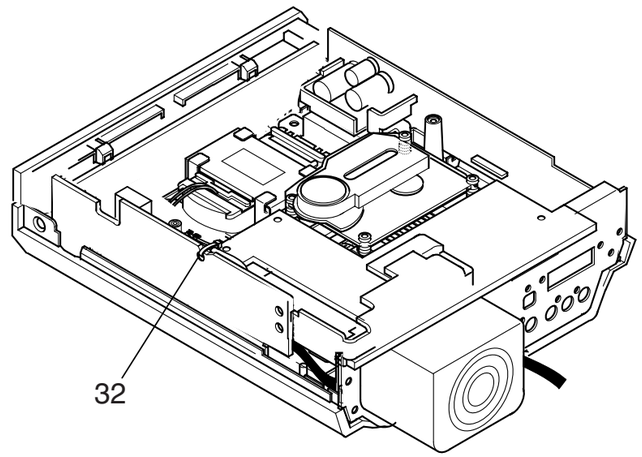
32

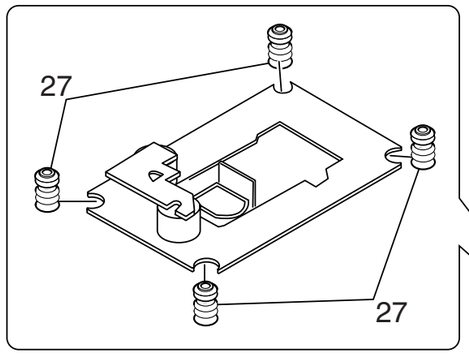
27
27

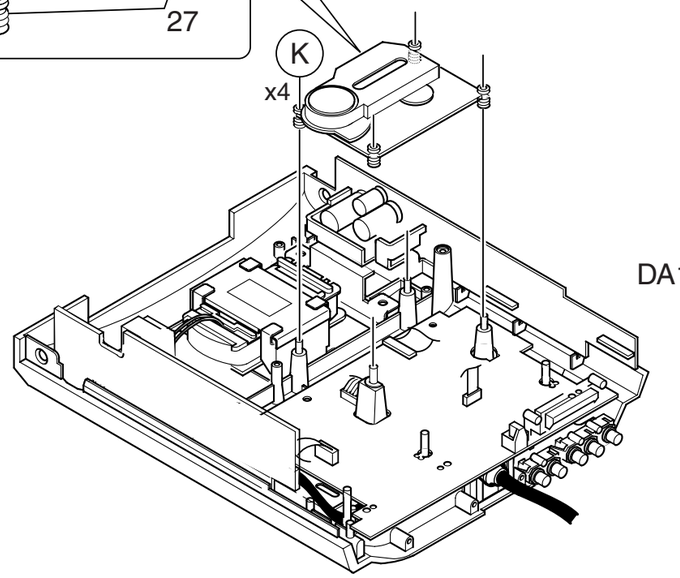
K
x4

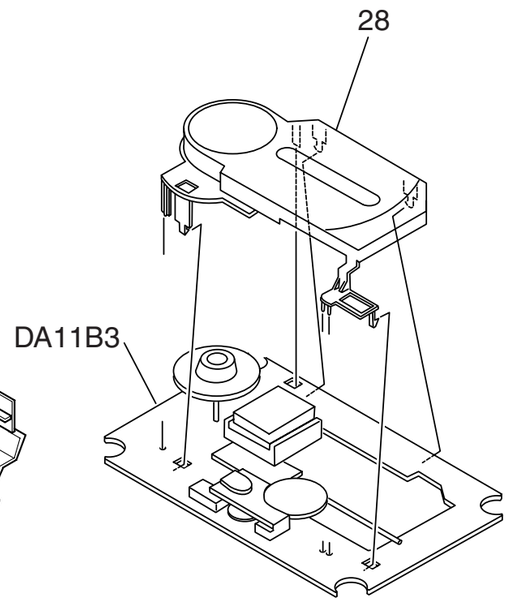
28
DA11B3

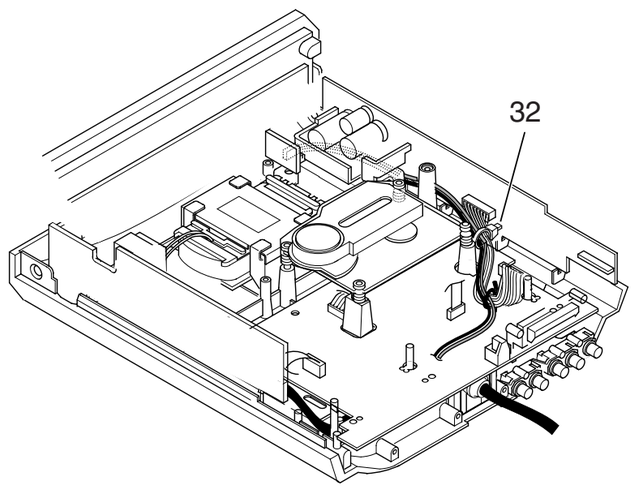
32

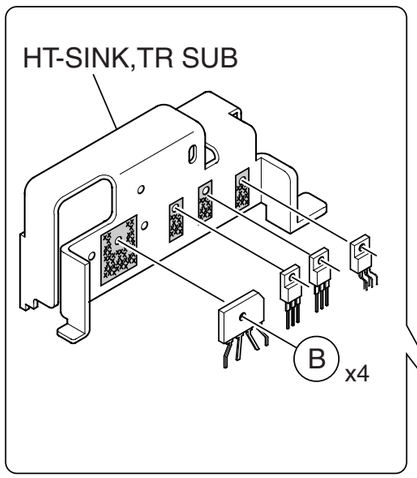
HT-SINK,TR SUB
B
x4

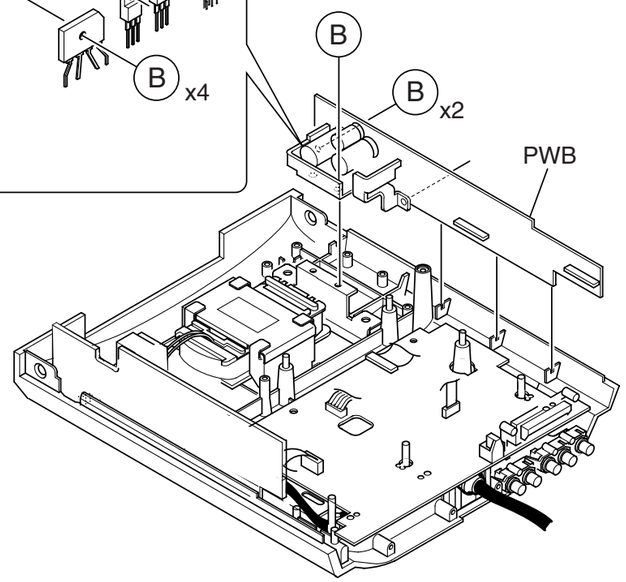
B
B
x2
PWB

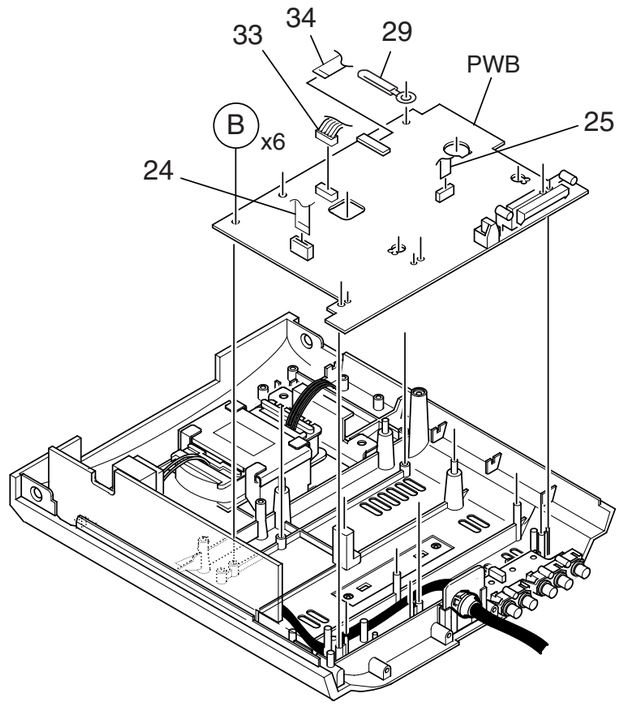
33
34
29
PWB
25
B
x6
24

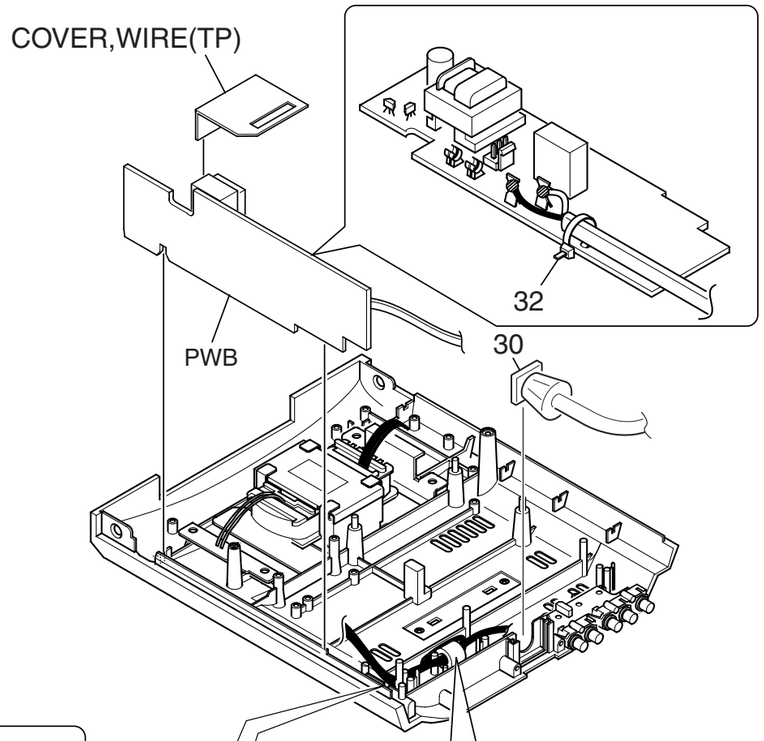
COVER,WIRE(TP)
32
PWB
30

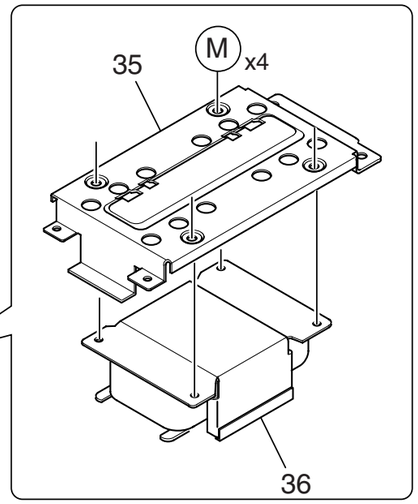
35
M
x4
36

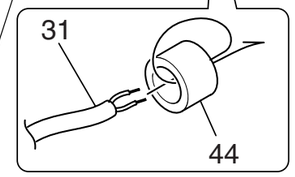
31
44

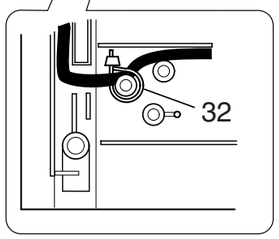
32

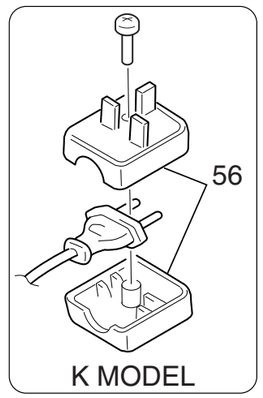
56
K MODEL

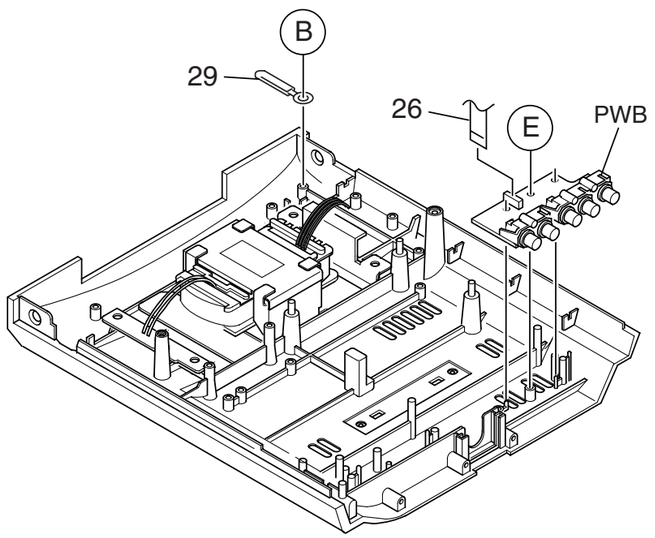
B
29
26
E
PWB

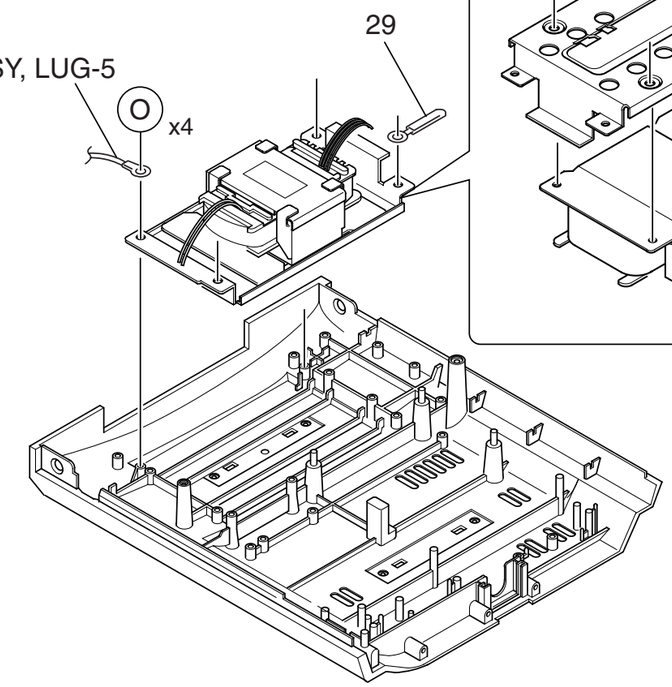
WIRE ASSY, LUG-5
O
x4
29

MECHANICAL PARTS ARRANGEMENT 6 / 6

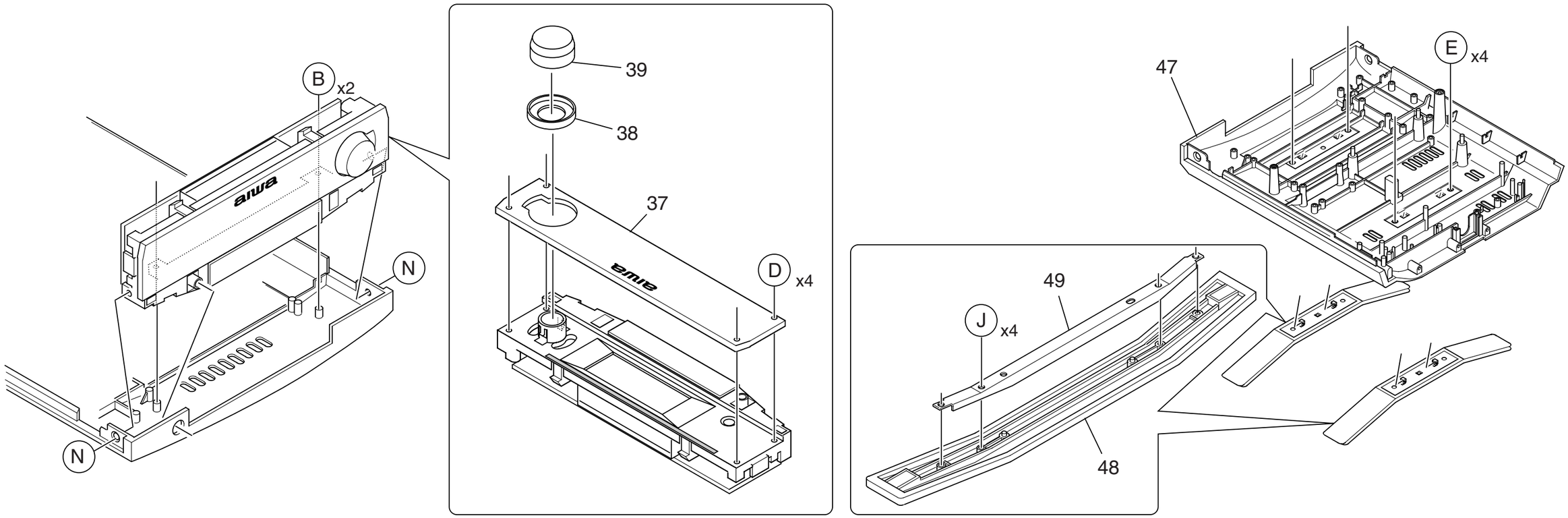

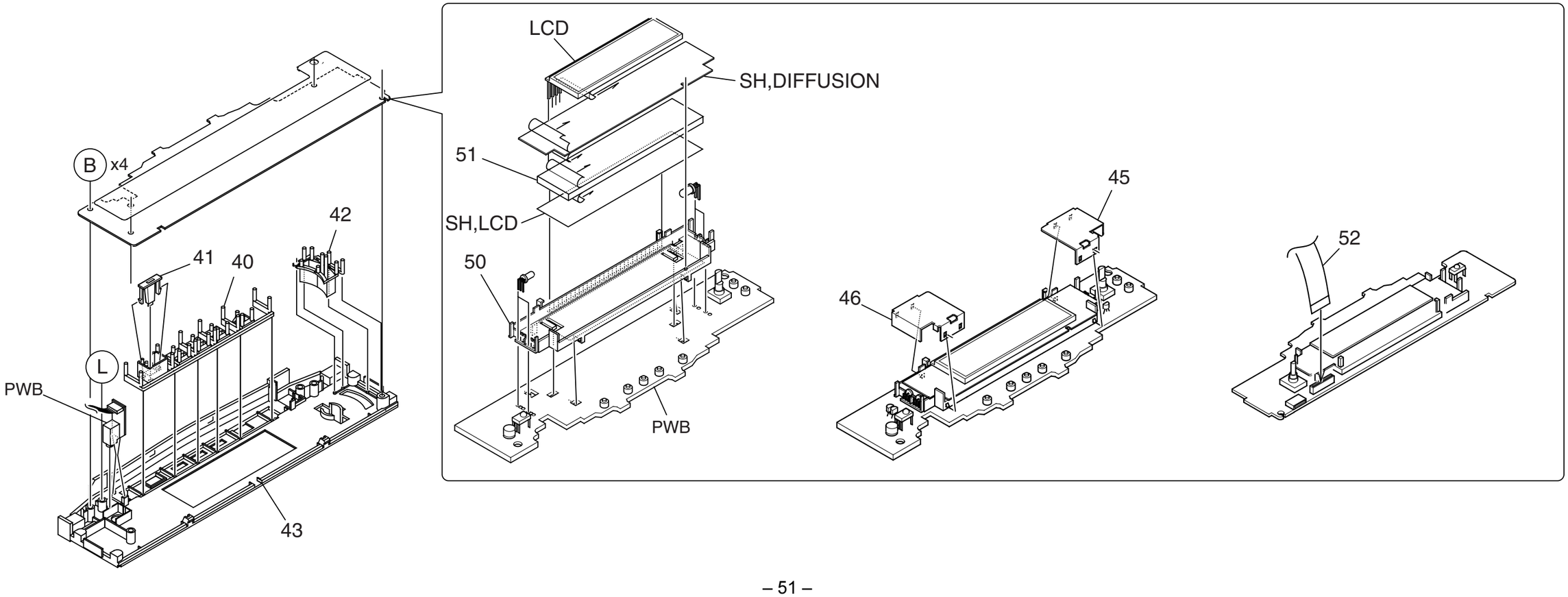

MECHANICAL PARTS LIST 1 / 1

REF. NO.	PART NO.	KANRI NO.	DESCRIPTION
1	8B-CL2-009-010		CAP, TOP
2	8B-CL2-054-010		WINDOW,TOP(N)<K,EZ,HR>
2	8B-CL2-055-010		WINDOW,TOP(N) U <U,C>
3	8B-CL2-045-110		RING,TOP
4	8B-CL2-022-110		PANEL,REAR CSM<C>
4	8B-CL2-028-110		PANEL,REAR USM<U>
4	8B-CL2-030-110		PANEL,REAR KSM<K>
4	8B-CL2-031-110		PANEL,REAR EZSM<EZ>
4	8B-CL2-032-110		PANEL,REAR HRJSM<HR>
5	88-912-081-110		FF-CABLE,12P 1.25 80MM
6	87-A90-796-010		FAN,F614R-12MC-19-240MM
7	8A-CQU-043-010		CUSH,TOP
8	8B-CL2-005-210		CABI,TOP U<U,C>
8	8B-CL2-040-210		CABI,TOP<K,EZ,HR>
9	8B-CL2-012-110		PLATE,OPE(L2)
10	8B-CL2-014-110		ARM,OPEN L
11	8B-CL2-223-010		HLDR,ARM L
12	8B-CL2-047-010		KEY,PLAY
13	8B-CL2-044-010		KEY,FUN
14	87-A90-036-010		MOT ASSY,RF-300CA-11440
15	84-ZG1-267-010		PULLEY,LOAD MO 8
16	8B-CL2-211-110		CHAS,GEAR
17	8B-CL2-214-010		GEAR,PULLY
18	8B-CL2-225-010		BELT,SQ1.2-32.2
19	8B-CL2-215-010		GEAR,MIDDLE
20	8B-CL2-226-010		W-P,6.5-12.8-0.3 B W/O ADH
21	8B-CL2-216-010		GEAR,OUT
22	8B-CL2-013-110		ARM,OPEN R
23	8B-CL2-212-010		HLDR,GEAR
24	8B-CL2-662-010		FF-CABLE,11P 1.0
25	8B-CL2-661-010		FF-CABLE,9P 1.0
26	88-908-121-110		FF-CABLE,8P 1.25 120MM
27	88-CH6-220-110		CUSHION,CD A
28	8Z-CDB-169-010		PANEL,CD SANYO
29	87-064-185-010		HLDR,WIRE PVC 0.5<K,EZ,HR>
30	88-NF9-203-010		BUSHING,CORD-U<U,C>
30	88-NF9-210-010		BUSHING,CORD-E<K,EZ,HR>
⚠ 31	87-A80-092-010		AC CORD ASSY,E BLK SUN FAI<EZ>
⚠ 31	87-A80-143-010		AC CORD ASSY,E BLK<K,HR>
⚠ 31	87-A80-149-010		AC CORD ASSY,U BLK<U,C>
32	87-A90-193-010		HLDR,CV100 (B)
33	86-ZG1-609-010		CONN ASSY,6P
34	8B-CL2-663-010		FF-CABLE,16P 1.0
35	8B-CL2-201-110		HLDR,PT
⚠ 36	8B-CL2-650-010		PT,BCL-2 U<U>
⚠ 36	8B-CL2-652-010		PT,BCL-2 EZ<K,EZ>
⚠ 36	8B-CL2-653-010		PT,BCL-2 HR<HR>
⚠ 36	8B-CL2-654-010		PT,BCL-2 C<C>
37	8B-CL2-010-010		WINDOW,FR
38	8B-CL2-026-010		REFLECTOR,VOL
39	8B-CL2-025-010		KNOB,RTRY VOL
40	8B-CL2-048-010		KEY,POWER
41	8B-CL2-027-010		REFLECTOR,POWER
42	8B-CL2-049-010		KEY,JOG
43	8B-CL2-001-010		CABI,FR<K,HR>
43	8B-CL2-004-010		CABI,FR U<U,C>
43	8B-CL2-008-010		CABI,FR EZ<EZ>
44	87-003-317-010		F-BEAD,15-25-15 E2515MRT
45	8B-CL2-218-010		HLDR,LCD R
46	8B-CL2-219-010		HLDR,LCD L
47	8B-CL2-041-110		CABI,BOTTOM<K>
47	8B-CL2-042-110		CABI,BOTTOM EZ<EZ>
47	8B-CL2-006-110		CABI,BOTTOM U<U,C>
47	8B-CL2-007-110		CABI,BOTTOM HR<HR>
48	8B-CL2-043-110		FOOT,ARCH
49	8B-CL2-205-110		HLDR,FOOT
50	8B-CL2-220-010		GUIDE,LCD
51	8B-CL2-029-010		REFLECTOR,LCD
52	8B-CL2-660-010		FF-CABLE,21P 1.0
53	88-905-121-110		FF-CABLE, 5P 120MM
54	88-908-201-110		FF-CABLE,8P 1.25
55	88-904-081-110		FF-CABLE,4P 1.25 80MM<EZ>
⚠ 56	87-099-811-010		PLUG,ADPTR CONV(K)<K>
A	87-067-761-010		BVT2+3-10 BLK
B	87-067-703-010		BVT2+3-10 W/O SL0T
C	8A-NF7-251-010		W,3.2-8-0.45
D	8Z-CL1-034-010		S-SCREW,ZCL1
E	87-067-579-010		BVT2+3-8 W/O SLOT
F	87-067-822-010		BVT2+3-20 W/O SL0T
G	87-067-868-010		V+1.7-4 BLK HL
H	87-B10-294-010		BVT2+2.6-8
I	87-067-767-010		BVTT+2.6-6
J	87-067-584-010		BVT2+3-6 W/O SL0T
K	8Z-CK5-222-010		S-SCREW,CD+2.6-6 F9
L	88-AR1-217-010		S-SCREW,BFT2+3-8
M	87-067-585-010		BVTT+4-6
N	87-721-095-410		QT2+3-8 W/O SL0T
O	87-741-096-410		UT2+3-10 W/O SLOT

COLOR NAME TABLE

Basic color symbol	Color	Basic color symbol	Color	Basic color symbol	Color
B	Black	C	Cream	D	Orange
G	Green	H	Gray	L	Blue
LT	Transparent Blue	N	Gold	P	Pink
R	Red	S	Silver	ST	Titan Silver
T	Brown	V	Violet	W	White
WT	Transparent White	Y	Yellow	YT	Transparent Yellow
LM	Metallic Blue	LL	Light Blue	GT	Transparent Green
LD	Dark Blue	DT	Transparent Orange	GM	Metallic Green
YM	Metallic Yellow	DM	Metallic Orange	PT	Transparent Pink
LA	Aqua Blue	GL	Light Green	HT	Transparent Gray

CD MECHANISM EXPLODED VIEW 1 / 1

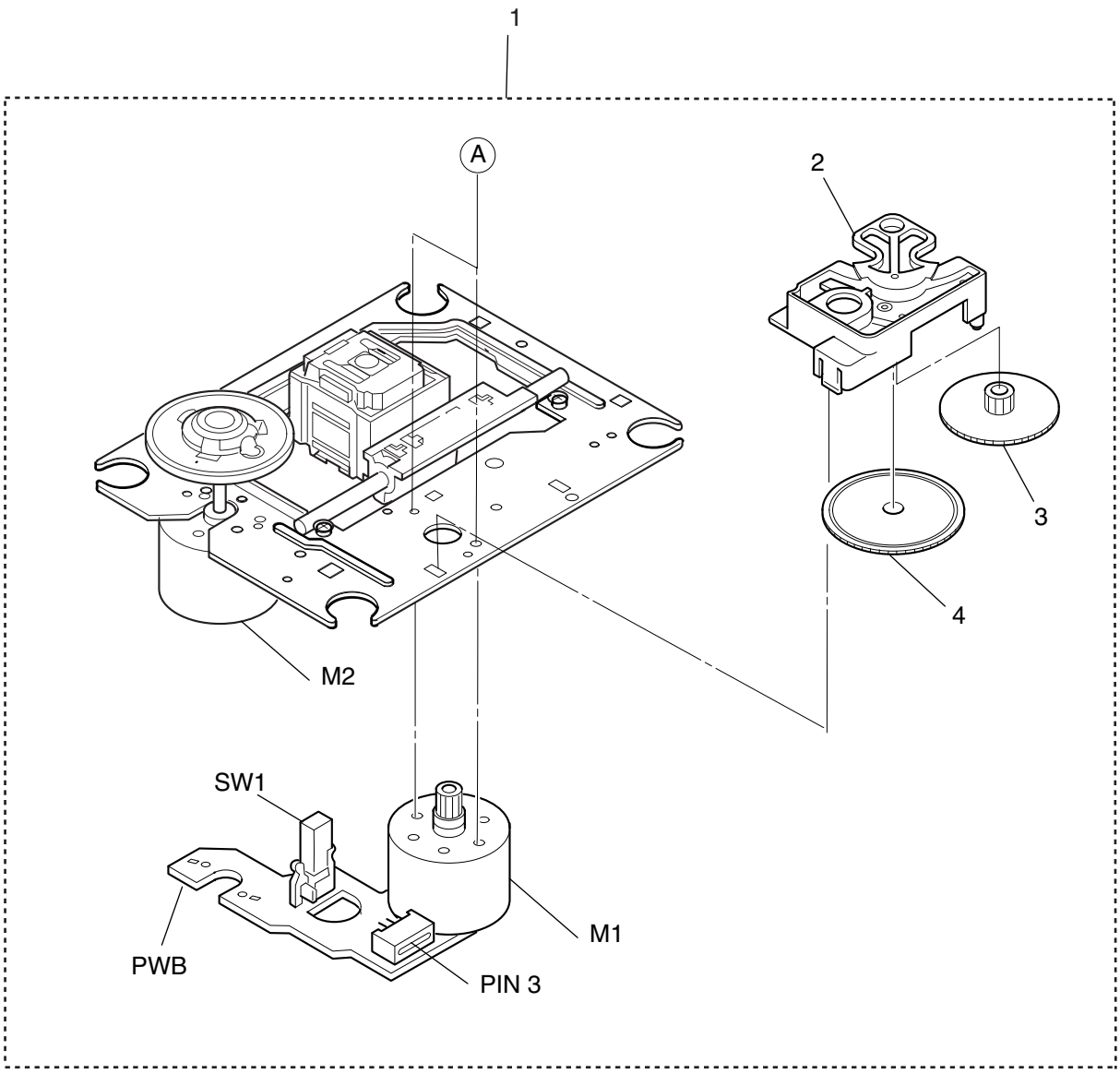

CD MECHANISM PARTS LIST 1 / 1

REF. NO.	PART NO.	KANRI NO.	DESCRIPTION
1	M8-AZK-M90-070		DA11B3
2	S2-121-A28-400		COVER GEAR
3	S2-511-A21-000		GEAR MIDDLE
4	S2-511-A21-100		GEAR,DRIVE
A	S1-PN2-03R-OSE		SCR PAN PCS 2-3

SPEAKER DISASSEMBLY INSTRUCTIONS

SX-LX7

1. Remove the speaker net.

2. Remove the four screws ①.

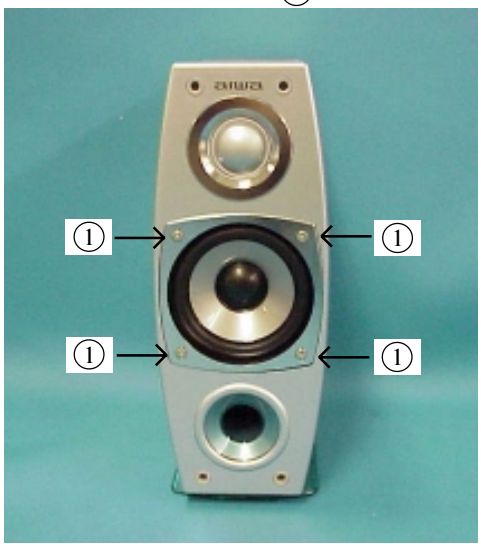

3. Remove the woofer.

4. Take out the rubber bushes ②, then remove the screws hidden by the bushes.

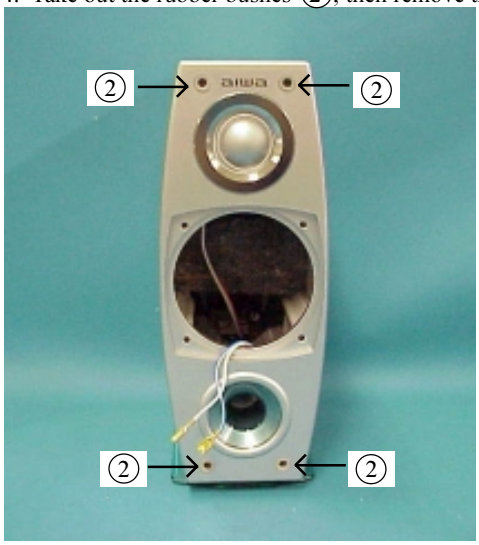

5. Remove the front panel.

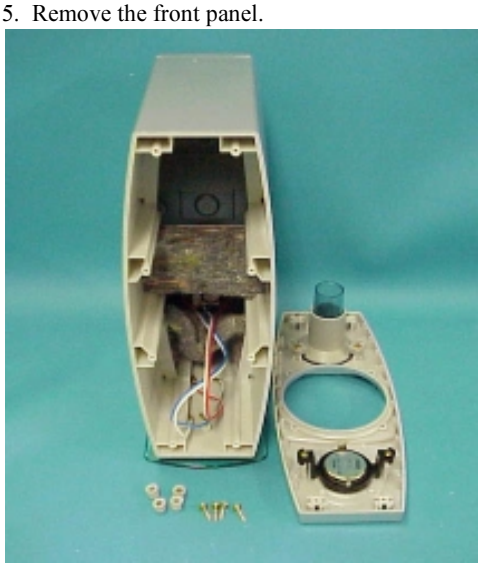

6. Remove the two screws and tweeter.

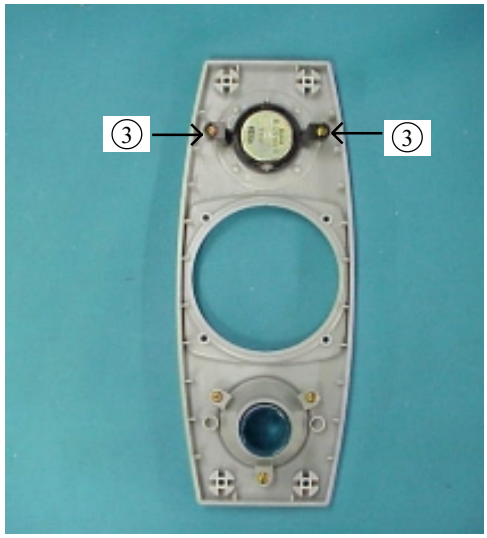

SPEAKER PARTS LIST <SX – LX7 (YJSN, YUJSN)>

REF. NO.	PART NO.	KANRI NO.	DESCRIPTION
1	8B-CP2-001-010		PANEL,FR
2	8B-CP2-002-010		PANEL,REAR
3	8B-CP2-003-010		CABI,S
4	8B-CP2-004-010		PANEL,DUCT A
5	8B-CP2-005-010		PANEL,DUCT B
6	8B-CP2-007-010		GRILLE,FRAME ASSY
7	8B-CP2-016-010		GRILLE,FRAME ASSY L/GR<YUJSN>
8	8B-CP2-018-010		GRILLE,FRAME ASSY D/GR<YUJSN>
9	8B-CP2-015-010		RING,W
10	8B-CP2-011-010		RING,TW
11	8B-CP2-012-010		TERMINAL
12	8B-CP2-013-010		FOOT
13	8A-CJ5-411-010		SPKR,W 87S
14	8B-CP2-604-010		SPKR,TW 25
15	8B-CP2-614-010		CORD,SP
16	8B-CP2-020-010		HLDR,A
17	8B-CP2-021-010		HLDR,B

ACCESSORIES / PACKAGE LIST

REF. NO.	PART NO.	KANRI NO.	DESCRIPTION
1	8B-CL2-903-210		IB,U(ESF)M<U,C>
1	8B-CL2-901-010		IB,H(ECA)M<HR>
1	8B-CL2-905-010		IB,K(E)M<K>
1	8B-CL2-906-110		IB,EZ(9L)M<EZ>
2	87-006-225-010		ANT,LOOP ANT NC2
3	87-043-115-010		FEEDER-ANT,FM<U,HR,C>
3	87-A90-118-010		ANT,WIRE FM(Z)<EZ,K>
4	8B-CL2-961-010		RC UNIT,RC-BAT01(BS)
⚠ 5	87-A92-262-010		PLUG,CONVERSION WT01<HR>
⚠ 6	87-099-811-010		PLUG,ADPTR CONV(K)<K>

アイワ株式会社 〒110-8710 東京都台東区池之端1-2-11 ☎03(3827)3111 (代表)
AIWA CO.,LTD. 2-11, IKENOHATA 1-CHOME, TAITO-KU, TOKYO 110, JAPAN TEL:03 (3827) 3111

9301978 931261
Printed in Singapore